LOT 16 HUNTER'S RIDGE S/D.
WD 1009-2683, WD 1080-2112, WD 1

HENRY FAMILY REVOCABLE TRUST APRIL 13, 2012
350 SW MOSSY OAK WAY
LAKE CITY, FL 32024

**2026**

**25-3S-15-00220-116**

## COLUMBIA COUNTY PROPERTY



## BUILDING CHARACTERISTICS

| ELEMENT | CD | CONSTRUCTION |
|---|---|---|
| Exterior Wall | 19 | COMMON BRK 100 |
| Roof Structur | 08 | IRREGULAR 100 |
| Roof Cover | 03 | COMP SHNGL 100 |
| Interior Wall | 05 | DRYWALL 100 |
| Interior Floo | 12 | HARDWOOD 80 |
| Interior Floo | 15 | HARDTILE 20 |
| Air Condition | 03 | CENTRAL 100 |
| Heating Type | 04 | AIR DUCTED 100 |
| Bedrooms | | 3 100 |
| Bathrooms | | 2.5 100 |
| Frame | 02 | WOOD FRAME 100 |
| Stories | 1. | 1. 100 |
| Architectual | 05 | CONV 100 |
| Units | | 0 100 |
| Quality | 07 | 07 |

DOR CODE 0100 SINGLE FAMILY
MAP NUM | MKT AREA 01
NEIGHBORHOOD/LOC 25315.02 1.00/

| AREA TYPE | TOTAL GROSS AREA | PCT OF BASE | YEAR | TOT ADJ AREA | SUBAREA MARKET VALUE |
|---|---|---|---|---|---|
| BAS | 2,892 | 100 | | 2,892 | 337,242 |
| FDG | 500 | 60 | | 300 | 34,984 |
| FDU | 500 | 60 | | 300 | 34,984 |
| FGR | 598 | 55 | | 329 | 38,365 |
| FOP | 200 | 30 | | 60 | 6,997 |
| FOP | 362 | 30 | | 109 | 12,711 |
| FOP | 612 | 30 | | 184 | 21,457 |
| TOTALS | 5,664 | | | 4,174 | 486,740 |

## MARKET ADJUSTMENTS

| TYPE | MDL | EFF. AREA | TOT ADJ PTS | EFF. BASE RATE | REPL. COST NEW | AYB | EYB | ECON | FNCT | | NORM | % COND |
|---|---|---|---|---|---|---|---|---|---|---|---|---|
| 0100 | 01 | 4,174 | 126.9730 | 142.21 | 593,585 | 2007 | 2007 | 0 | 0 | 0 | 18.00 | 82.00 |

1 SINGLE FAM 100% - 2022 Heated Area: 2892 HX Base Yr 2022

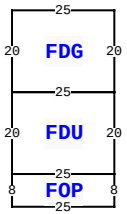


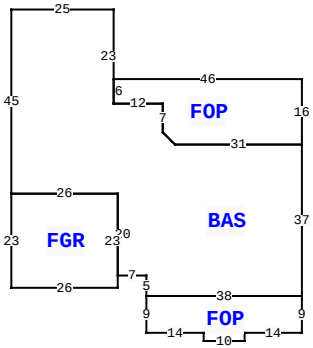


350 SW MOSSY OAK WAY, LAKE CITY

| | | | |
|---|---|---|---|
| BLD DATE | | LGL DATE | |
| XF DATE | | LAND DATE | 04/06/2022 MLU |
| INC DATE | | AG DATE | |

## VALUATION SUMMARY

| | | |
|---|---|---|
| VALUATION BY | | STANDARD |
| Tax Group: 3 | Tax Dist: | |
| BUILDING MARKET VALUE | | 486,740 |
| TOTAL MARKET OB/XF VALUE | | 48,234 |
| TOTAL LAND VALUE - MARKET | | 35,420 |
| TOTAL MARKET VALUE | | 570,394 |
| SOH/AGL Deduction | | 32,199 |
| ASSESSED VALUE | | 538,195 |
| TOTAL EXEMPTION VALUE | HX HB | 50,722 |
| BASE TAXABLE VALUE | | 487,473 |
| TOTAL JUST VALUE | | 570,394 |
| NCON VALUE | | 0 |
| INCOME VALUE | | |
| PREVIOUS YEAR MKT VALUE | | 576,953 |

| PERMIT NUM | DESCRIPTION | AMT | ISSUED |
|---|---|---|---|
| 000050222 | Electrical Servic | 0 | 06/26/2024 |
| 000045621 | Roof Replacement | 29,000 | 10/05/2022 |
| 000042849 | Swimming Pool and | 59,000 | 09/28/2021 |
| 25620 | GARAGE | 311 | 03/14/2007 |
| 24533 | SFR | 778 | 05/19/2006 |

## SALES DATA

| OFF RECORD Number | DATE | TYPE INST | Q / U | V / I | RSN CD | SALE PRICE |
|---|---|---|---|---|---|---|
| 1529/863 | 11/12/2024 | LE | U | I | 14 | 100 |
| GRANTOR: HENRY CHRISTOPHER TRA | | | | | | |
| GRANTEE: HENRY FAMILY REVOCA | | | | | | |
| 1435/539 | 4/14/2021 | WD | Q | I | 01 | 499,900 |
| GRANTOR: WARD BAYNARD J | | | | | | |
| GRANTEE: HENRY CHRISTOPHER T | | | | | | |

## BUILDING NOTES

## BUILDING DIMENSIONS

BAS=[ORIG=0,0] W25 S45 E26 S20 E7 S5 E38 N37 W31 U3L3 N7 W12 N23 $

FOP=[ORIG=46,33] N16 W46 S6 E12 S7 D3R3 E31 $
FGR=[ORIG=-25,45] S23 E26 N23 W26 $
FDU=[ORIG=40,-38] N20 W25 S20 E25 $
FDG=[ORIG=40,-58] N20 W25 S20 E25 $
FOP=[ORIG=8,70] S9 E14 S2 E10 N2 E14 N9 W38 $
FOP=[ORIG=40,-30] N8 W25 S8 E25 $
.

## EXTRA FEATURES

| LN | OB/XF CODE | DESCRIPTION | BLD | CAP | L | W | UNITS | UT | Adj R | ADJ UNIT PRICE | ORIG COND | YEAR ON | YEAR ACTUAL | Q | % COND | OB/XF MKT VALUE | NOTES |
|---|---|---|---|---|---|---|---|---|---|---|---|---|---|---|---|---|---|
| 1 | 0166 | CONC,PAVMT | 0 | 100 | 0 | 0 | 1,048.00 | UT | 3.00 | 3.00 | 100 | 2007 | 2007 | 3 | 100 | 3,144 | |
| 2 | 0166 | CONC,PAVMT | 0 | 100 | 0 | 0 | 1,048.00 | UT | 3.00 | 3.00 | 100 | 2007 | 2007 | 3 | 100 | 3,144 | |
| 3 | 0280 | POOL R/CON | 0 | 100 | 14 | 33 | 462.00 | UT | 70.00 | 70.00 | 100 | 2024 | 2023 | | 97 | 31,370 | |
| 4 | 0166 | CONC,PAVMT | 0 | 100 | 0 | 0 | 1,392.00 | UT | 3.00 | 3.00 | 100 | 2024 | 2023 | | 100 | 4,176 | |
| 5 | 0120 | CLFENCE 4 | 0 | 100 | 0 | 0 | 1.00 | UT | 1,000.00 | 1,000.00 | 100 | 2024 | 2023 | | 100 | 1,000 | |
| 6 | 0104 | GENERATOR | 0 | 100 | 0 | 0 | 1.00 | UT | 6,000.00 | 6,000.00 | 100 | 2025 | 2024 | | 90 | 5,400 | |

## LAND DESCRIPTION

TOTAL OB/XF 48,234

| LN | USE CODE | CLS | LAND USE DESCRIPTION | CAP | RD | LOC ZONE | FRONT | DEPTH | TOT LND UTS | UNIT TYPE | DT | DPTH FACT | % COND | TOT ADJ | UNIT PRICE | ADJ UNIT PRICE | LAND VALUE | OTHER ADJUSTMENTS AND NOTES | YEAR | DENSITY | DECL | FRZ | YR | CONSRV |
|---|---|---|---|---|---|---|---|---|---|---|---|---|---|---|---|---|---|---|---|---|---|---|---|---|
| 1 | 0100 | C | SFR | 100 | | A-1 | 0.00 | 0.00 | 3.08 | AC | | 1.00 | 1.00 | 1.00 | 11,500.00 | 11,500.00 | 35,420 | | | | | | | |

REVIEW DATE 12/23/2024 BY TW Total Acres: 3.08 Total Land Value: 35,420 Market: 0 Agricultural: 0 Common: 35,420 PRINTED 11/06/2025 BY SYS