LOT 9 WINDSWEPT INDUSTRIAL S/D
UNIT 2. DESC AS FOLLOWS: COMM
SW COR OF LOT 3 WINDSWEPT S/D

DO IT YOURSELF LETTERING INC
215 SW WINDSWEPT GLN
LAKE CITY, FL 32024

2026

24-4S-16-03120-109

COLUMBIA COUNTY PROPERTY

BUILDING CHARACTERISTICS

ELEMENT	CD	CONSTRUCTION
Exterior Wall	27	PREFIN MTL 100
Roof Structur	10	STEEL FRME 100
Roof Cover	14	PREFIN MT 100
Interior Wall	01	MINIMUM 100
Interior Floo	03	CONC FINSH 100
Ceiling	03	PART.FIN. 100
Air Condition	06	ENG CENTRL 100
Heating Type	09	ENG F AIR 100
Plumbing		9 100
Frame	05	STEEL 100
Story Height		16 100
RMS		4 100
Stories	1.	1. 100
Units		0 100
Quality	07	07

DOR CODE	4817	WHSE STORAGE/OFFICE	
MAP NUM		MKT AREA	06
NEIGHBORHOOD/LOC	24416.00	1.00/	

AREA TYPE	TOTAL GROSS AREA	PCT OF BASE	YEAR	TOT ADJ AREA	SUBAREA MARKET VALUE
AOF	1,572	150		2,358	157,236
BAS	7,428	100		7,428	495,311
BAS	3,000	100	2023	3,000	200,045
CLP	520	60		312	20,805
TOTALS	12,520			13,098	873,396

MARKET ADJUSTMENTS

TYPE	MDL	EFF. AREA	TOT ADJ PTS	EFF. BASE RATE	REPL. COST NEW	AYB	EYB	ECON	FNCT		NORM	% COND
8700	06	13,098	182.7946	69.46	909,787	2019	2019	0	0	0	4.00	96.00

1 PREF M B A 0% - 0 Heated Area: 12000 HX Base Yr

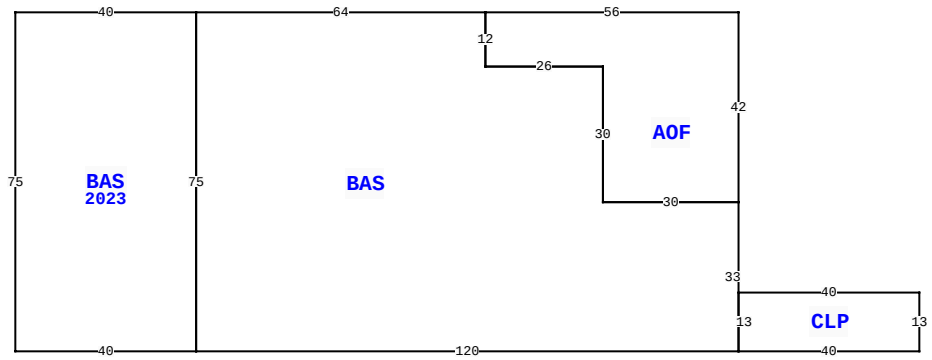

215 SW WINDSWEPT GLN, LAKE CITY

BLD DATE		LGL DATE	
XF DATE		LAND DATE	
INC DATE		AG DATE	

VALUATION SUMMARY

VALUATION BY	STANDARD
Tax Group: 2	Tax Dist:
BUILDING MARKET VALUE	873,396
TOTAL MARKET OB/XF VALUE	38,130
TOTAL LAND VALUE - MARKET	86,500
TOTAL MARKET VALUE	998,026
SOH/AGL Deduction	0
ASSESSED VALUE	998,026
TOTAL EXEMPTION VALUE	0
BASE TAXABLE VALUE	998,026
TOTAL JUST VALUE	998,026
NCON VALUE	0
INCOME VALUE	
PREVIOUS YEAR MKT VALUE	998,026

PERMIT NUM	DESCRIPTION	AMT	ISSUED
000043360	New Commercial Co	100,000	12/10/2021
37717	COMMERCIAL	2,824	02/05/2019

SALES DATA

OFF RECORD Number	DATE	TYPE INST	Q U	V I	RSN CD	SALE PRICE
1369/1795	9/28/2018	WD	Q	V	01	106,300
GRANTOR: SEMPER FI HOLDING CO						
GRANTEE: DO IT YOURSELF LETT						
1066/0975	11/28/2005	TR	Q	V		104,100
GRANTOR: WINDSWEPT LAND TRUST						
GRANTEE: SEMPER FI HOLDING C						

BUILDING NOTES

BUILDING DIMENSIONS

BAS=[ORIG=0,0] W64 S75 E120 N33 W30 N30 W26 N12 $
AOF=[ORIG=56,42] N42 W56 S12 E26 S30 E30 $
CLP=[ORIG=56,75] E40 N13 W40 S13 $
BAS=[YR=2023;ORIG=-64,0] W40 S75 E40 N75 $
.

EXTRA FEATURES

LN	OB/XF CODE	DESCRIPTION	BLD	CAP	L	W	UNITS	UT	Adj R	ADJ UNIT PRICE	ORIG COND	YEAR ON	YEAR ACTUAL	Q	% COND	OB/XF MKT VALUE	NOTES
1	0166	CONC,PAVMT	0	0	4	160	640.00	UT	2.00	2.00	100	2019	2019	3	100	1,280	
2	0260	PAVEMENT-A	0	0	0	0	19,328.00	UT	1.60	1.60	100	2019	2019	3	100	30,925	
3	0166	CONC,PAVMT	0	0	25	15	375.00	UT	3.00	3.00	100	2023	2022		100	1,125	
4	0060	CARPORT F	0	0	20	20	400.00	UT	4.00	4.00	100	2023	2022		100	1,600	
5	0060	CARPORT F	0	0	20	20	400.00	UT	4.00	4.00	100	2023	2022		100	1,600	
6	0060	CARPORT F	0	0	20	20	400.00	UT	4.00	4.00	100	2023	2022		100	1,600	

LAND DESCRIPTION

TOTAL OB/XF 38,130

LN	USE CODE	CLS	LAND USE DESCRIPTION	CAP	RD	LOC ZONE	FRONT	DEPTH	TOT LND UTS	UNIT TYPE	DT	DPTH FACT	% COND	TOT ADJ	UNIT PRICE	ADJ UNIT PRICE	LAND VALUE	OTHER ADJUSTMENTS AND NOTES	YEAR	DENSITY	DECL	FRZ	YR	CONSRV
1	4817	C	STORG/ OFF	0			0.00	0.00	1.73	AC		1.00	1.00	1.00	50,000.00	50,000.00	86,500							

REVIEW DATE 02/20/2025 BY KS Total Acres: 1.73 Total Land Value: 86,500 Market: 0 Agricultural: 0 Common: 86,500 PRINTED 11/17/2025 BY SYS