COMM NE COR OF NE1/4 OF NW1/4
OF SEC 25, RUN N 1117.51 FT,
RUN W 243.04 FT, S 84 FT, W

BELLAMY ROBERT T/BELLAMY PENELOPE TROUTMAN
467 SW THURMAN TERR
LAKE CITY, FL 32024

2025

24-4S-16-03116-029

COLUMBIA COUNTY PROPERTY

BUILDING CHARACTERISTICS

ELEMENT	CD	CONSTRUCTION
Exterior Wall	12	CEDAR 50
Exterior Wall	19	COMMON BRK 50
Roof Structur	03	GABLE/HIP 100
Roof Cover	12	MODULAR MT 100
Interior Wall	05	DRYWALL 100
Interior Floo	14	CARPET 90
Interior Floo	08	SHT VINYL 10
Air Condition	03	CENTRAL 100
Heating Type	04	AIR DUCTED 100
Bedrooms		3 100
Bathrooms		2 100
Frame	01	NONE 100
Stories	1.	1. 100
Architectual	05	CONV 100
Units		0 100
Condition Adj	03	03 100
Kitchen Adjus	01	01 100
Quality	05	05
DOR CODE	0100	SINGLE FAMILY
MAP NUM		MKT AREA 06
NEIGHBORHOOD/LOC	24416.030	1.00/

AREA TYPE	TOTAL GROSS AREA	PCT OF BASE	YEAR	TOT ADJ AREA	SUBAREA MARKET VALUE
BAS	1,693	100		1,693	141,683
FEP	528	80		422	35,316
FGR	483	55		266	22,261
FOP	165	30		50	4,185
FSP	198	40		79	6,611
FST	168	55		92	7,699
PTO	284	5		14	1,172
UDU	220	55		121	10,126
TOTALS	3,739			2,737	229,053

MARKET ADJUSTMENTS

TYPE	MDL	EFF. AREA	TOT ADJ PTS	EFF. BASE RATE	REPL. COST NEW	AYB	EYB	ECON	FNCT		NORM	% COND
0100	01	2,737	114.9540	128.75	352,389	1977	1977	0	0	0	35.00	65.00

1 SINGLE FAM – 100% - 1998 Heated Area: 1693 HX Base Yr 1998

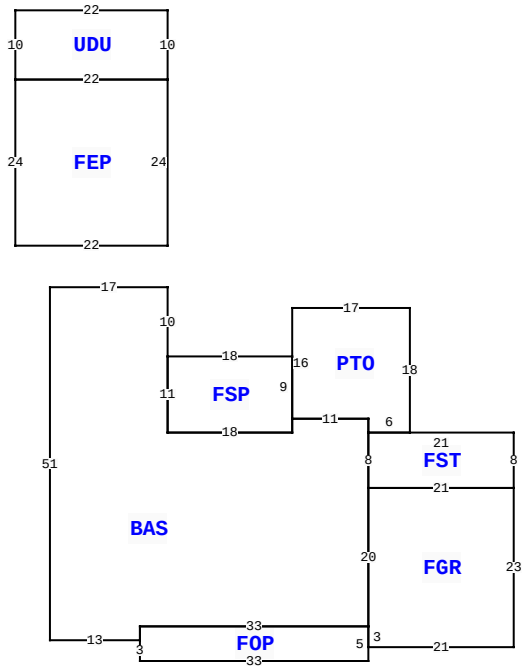

467 SW THURMAN TER, LAKE CITY

BLD DATE		LGL DATE	
XF DATE		LAND DATE	04/21/2023 MLU
INC DATE		AG DATE	

VALUATION SUMMARY

VALUATION BY		STANDARD
Tax Group: 2	Tax Dist:	
BUILDING MARKET VALUE		229,053
TOTAL MARKET OB/XF VALUE		10,534
TOTAL LAND VALUE - MARKET		22,500
TOTAL MARKET VALUE		262,087
SOH/AGL Deduction		111,158
ASSESSED VALUE		150,929
TOTAL EXEMPTION VALUE	HX HB VX	55,722
BASE TAXABLE VALUE		95,207
TOTAL JUST VALUE		262,087
NCON VALUE		5,700
INCOME VALUE		
PREVIOUS YEAR MKT VALUE		242,065

PERMIT NUM	DESCRIPTION	AMT	ISSUED
000051538	Generator	0	11/18/2024
32207	MAINT/ALTR	65	08/14/2014

SALES DATA

OFF RECORD Number	DATE	TYPE INST	Q U	V I	RSN CD	SALE PRICE
0841/1756	7/01/1997	WD	Q	I		75,900
GRANTOR: BAUGH						
GRANTEE: BELLAMY						
0671/0082	12/21/1988	WD	Q	I		69,500
GRANTOR: ANDERSON RAY						
GRANTEE: BAUGH JERRY						

BUILDING NOTES

BUILDING DIMENSIONS

BAS= W17 S51 E13 FOP= S3 E33N5 W33 S2$ N2 E33 FGR= N20 E21 S23 W21 N3$ N20 FST= E21 N8 W21S8$ N8 PTO= E6 N18 W17 S16 E11 S2$ N2 W11 FSP= N9 W18 S11 E18 N2$S2 W18 N11 N10$ PTR=N30 UDU= N10 W22 S10 E22$ FEP= W22 S24 E22 N24$ S30$.

EXTRA FEATURES

LN	OB/XF CODE	DESCRIPTION	BLD	CAP	L	W	UNITS	UT	Adj R	ADJ UNIT PRICE	ORIG COND	YEAR ON	YEAR ACTUAL	Q	% COND	OB/XF MKT VALUE	NOTES
1	0190	FPLC PF	0	100	0	0	1.00	UT	1,200.00	1,200.00	100	0	0	3	100	1,200	
2	0166	CONC,PAVMT	0	100	0	0	2,596.00	UT	2.00	2.00	70	1993	1993	3	70	3,634	
3	0104	GENERATOR	0	100	0	0	1.00	UT	6,000.00	6,000.00	100	2025	2024		95	5,700	

LAND DESCRIPTION

TOTAL OB/XF 10,534

LN	USE CODE	CLS	LAND USE DESCRIPTION	CAP	RD	LOC ZONE	FRONT	DEPTH	TOT LND UTS	UNIT TYPE	DT	DPTH FACT	% COND	TOT ADJ	UNIT PRICE	ADJ UNIT PRICE	LAND VALUE	OTHER ADJUSTMENTS AND NOTES	YEAR	DENSITY	DECL	FRZ	YR	CONSRV
1	0100	C	SFR	100		RSF-	1171.00	170.00	1.00	LT		1.00	1.00	1.00	22,500.00	22,500.00	22,500							

REVIEW DATE 02/18/2025 BY KS Total Acres: 0.67 Total Land Value: 22,500 Market: 0 Agricultural: 0 Common: 22,500 PRINTED 06/27/2025 BY SYS