COMM SW COR OF SW1/4 OF NE1/4, R
N 464.02 FT FOR POB, CONT N 417
420 FT, W 210 FT TO POB.(AKA LOT

MURRAY MELISSA ERIN/BEAUFORD BAYE
4177 STACEY RD W
JACKSONVILLE, FL 32250

2026

24-4S-16-03103-010

COLUMBIA COUNTY PROPERTY

BUILDING CHARACTERISTICS

ELEMENT	CD	CONSTRUCTION
Exterior Wall	19	COMMON BRK 100
Roof Structur	03	GABLE/HIP 100
Roof Cover	03	COMP SHNGL 100
Interior Wall	05	DRYWALL 90
Interior Wall	06	CUST PANEL 10
Interior Floo	14	CARPET 90
Interior Floo	08	SHT VINYL 10
Air Condition	03	CENTRAL 100
Heating Type	04	AIR DUCTED 100
Bedrooms		3 100
Bathrooms		2 100
Frame	01	NONE 100
Stories	1.	1. 100
Architectual	05	CONV 100
Units		0 100
Condition Adj	03	03 100
Kitchen Adjus	01	01 100
Quality	05	05
DOR CODE	0100	SINGLE FAMILY
MAP NUM		MKT AREA 06
NEIGHBORHOOD/LOC	24416.020	1.00/

AREA TYPE	TOTAL GROSS AREA	PCT OF BASE	YEAR	TOT ADJ AREA	SUBAREA MARKET VALUE
BAS	1,305	100		1,305	109,204
FCP	360	25		90	7,532
FOP	110	30		33	2,761
FST	105	55		58	4,854
USP	228	35		80	6,694
UST	768	45		346	28,954
TOTALS	2,876			1,912	159,998

MARKET ADJUSTMENTS

TYPE	MDL	EFF. AREA	TOT ADJ PTS	EFF. BASE RATE	REPL. COST NEW	AYB	EYB	ECON	FNCT		NORM	% COND
0100	01	1,912	114.9450	128.74	246,151	1973	1973	0	0	0	35.00	65.00

1 SINGLE FAM 0% - 2025 Heated Area: 1305 HX Base Yr

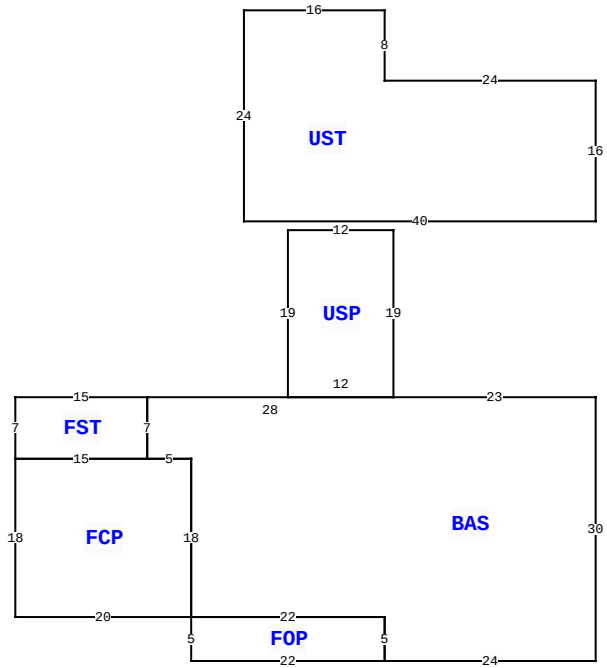

206 SW AUDREY WAY, LAKE CITY

BLD DATE		LGL DATE	
XF DATE		LAND DATE	04/03/2025 MLU
INC DATE		AG DATE	

VALUATION SUMMARY

VALUATION BY	STANDARD
Tax Group: 2	Tax Dist:
BUILDING MARKET VALUE	159,998
TOTAL MARKET OB/XF VALUE	1,100
TOTAL LAND VALUE - MARKET	52,500
TOTAL MARKET VALUE	213,598
SOH/AGL Deduction	0
ASSESSED VALUE	213,598
TOTAL EXEMPTION VALUE	0
BASE TAXABLE VALUE	213,598
TOTAL JUST VALUE	213,598
NCON VALUE	0
INCOME VALUE	
PREVIOUS YEAR MKT VALUE	213,598

PERMIT NUM	DESCRIPTION	AMT	ISSUED
000044461	Roof Replacement	11,300	05/17/2022
24155	SFR	496	02/20/2006

SALES DATA

OFF RECORD Number	DATE	TYPE INST	Q U	V I	RSN CD	SALE PRICE
1512/2615	4/19/2024	WD	U	I	37	195,000
GRANTOR: RZEZNIK VAN MARTIN						
GRANTEE: MURRAY MELISSA ERIN						
1501/1743	9/21/2023	WD	U	I	11	100
GRANTOR: ARTMAN CHRISTOPHER A						
GRANTEE: RZEZNIK VAN MARTIN						

BUILDING NOTES

BUILDING DIMENSIONS

BAS= W23 USP= N19 W12 S19 E12$ W28 FST= W15 S7 E15N7$S7FCP= W15 S18 E20 N18 W5$ E5S18FOP= S5 E22 N5 W22$ E22 S5E24 N30$ PTR=N20 UST= N16 W24N8 W16 S24 E40$ S20$.

EXTRA FEATURES

LN	OB/XF CODE	DESCRIPTION	BLD	CAP	L	W	UNITS	UT	Adj R	ADJ UNIT PRICE	ORIG COND	YEAR ON	YEAR ACTUAL	Q	% COND	OB/XF MKT VALUE	NOTES
1	0166	CONC,PAVMT	0	0	0	0	1.00	UT	0.00	0.00	100	0	0	3	100	1,000	
2	0296	SHED METAL	0	0	9	9	1.00	UT	0.00	0.00	100	1993	1993	3	100	100	

LAND DESCRIPTION

TOTAL OB/XF 1,100

LN	USE CODE	CLS	LAND USE DESCRIPTION	CAP	RD	LOC ZONE	FRONT	DEPTH	TOT LND UTS	UNIT TYPE	DT	DPTH FACT	% COND	TOT ADJ	UNIT PRICE	ADJ UNIT PRICE	LAND VALUE	OTHER ADJUSTMENTS AND NOTES	YEAR	DENSITY	DECL	FRZ	YR	CONSRV
1	0100	C	SFR	0		A-1	0.00	0.00	2.00	LT		1.00	1.00	0.75	35,000.00	26,250.00	52,500							

REVIEW DATE 02/25/2025 BY KS Total Acres: 2.00 Total Land Value: 52,500 Market: 0 Agricultural: 0 Common: 52,500 PRINTED 11/18/2025 BY SYS