LOT 14 COBBLESTONE UNIT 1.

WD 1039-67, WD 1264-2258, WD 133

BROWN PAUL V/BROWN JODI
643 NW BRIDGEWATER TER
LAKE CITY, FL 32055-7304

2026

24-3S-16-02275-114

COLUMBIA COUNTY PROPERTY

BUILDING CHARACTERISTICS

ELEMENT	CD	CONSTRUCTION
Exterior Wall	16	WD FR STUC 100
Roof Structur	08	IRREGULAR 100
Roof Cover	03	COMP SHNGL 100
Interior Wall	05	DRYWALL 100
Interior Floo	12	HARDWOOD 80
Interior Floo	15	HARDTILE 20
Air Condition	03	CENTRAL 100
Heating Type	04	AIR DUCTED 100
Bedrooms		3 100
Bathrooms		2 100
Frame	02	WOOD FRAME 100
Stories	1.	1. 100
Architectual	05	CONV 100
Units		0 100
Quality	07	07

DOR CODE	0100	SINGLE FAMILY	
MAP NUM		MKT AREA	03
NEIGHBORHOOD/LOC	24316.00	1.00/	

AREA TYPE	TOTAL GROSS AREA	PCT OF BASE	YEAR	TOT ADJ AREA	SUBAREA MARKET VALUE
BAS	2,233	100		2,233	285,611
FGR	506	55		278	35,557
FOP	8	30		2	256
PTO	398	5		20	2,558
TOTALS	3,145			2,533	323,982

MARKET ADJUSTMENTS

TYPE	MDL	EFF. AREA	TOT ADJ PTS	EFF. BASE RATE	REPL. COST NEW	AYB	EYB	ECON	FNCT		NORM	% COND
0100	01	2,533	127.6000	142.91	361,991	2018	2018	0	0	0	10.50	89.50

1 SINGLE FAM 100% - 2019 Heated Area: 2233 HX Base Yr 2019

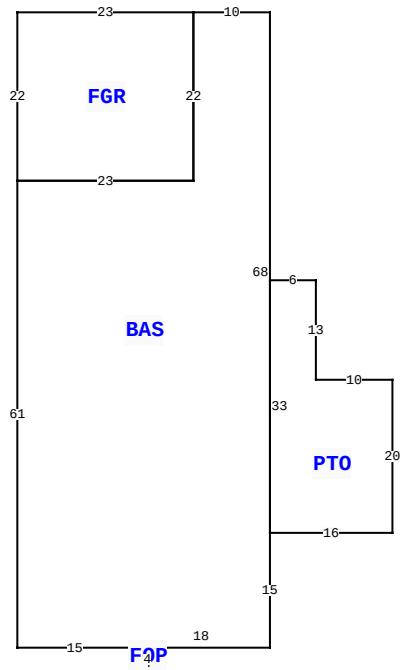

643 NW BRIDGEWATER TER, LAKE CITY

BLD DATE		LGL DATE	
XF DATE		LAND DATE	05/11/2023 MLU
INC DATE		AG DATE	

VALUATION SUMMARY

VALUATION BY		STANDARD
Tax Group: 2	Tax Dist:	
BUILDING MARKET VALUE		323,982
TOTAL MARKET OB/XF VALUE		33,965
TOTAL LAND VALUE - MARKET		40,000
TOTAL MARKET VALUE		397,947
SOH/AGL Deduction		96,894
ASSESSED VALUE		301,053
TOTAL EXEMPTION VALUE	HX HB DX SX	105,722
BASE TAXABLE VALUE		195,331
TOTAL JUST VALUE		397,947
NCON VALUE		0
INCOME VALUE		
PREVIOUS YEAR MKT VALUE		404,583

PERMIT NUM	DESCRIPTION	AMT	ISSUED
000041923	Screen Enclosure	17,000	05/17/2021
410225	POOL		12/15/2020
36330	SFR	972	02/14/2018

SALES DATA

OFF RECORD Number	DATE	TYPE INST	Q U /	V I /	RSN CD	SALE PRICE
1521/44	8/08/2024	LE	U	I	14	100
GRANTOR: BROWN PAUL V (ENH LIF						
GRANTEE: MOORE MARTIN MICHAE						
1417/1215	8/13/2020	WD	U	I	11	100
GRANTOR: PAUL & JODI BROWN						
GRANTEE: PAUL V & JODI D BRO						

BUILDING NOTES

BUILDING DIMENSIONS

BAS= W10 FGR= W23 S22 E23 N22$ S22 W23 S61 E15 FOP= S2 E4 N2 W4$ E18 N15 PTO= E16 N20 W10 N13 W6 S33 $ N68$.

EXTRA FEATURES

LN	OB/XF CODE	DESCRIPTION	BLD	CAP	L	W	UNITS	UT	Adj R	ADJ UNIT PRICE	ORIG COND	YEAR ON	YEAR ACTUAL	Q	% COND	OB/XF MKT VALUE	NOTES
1	0190	FPLC PF	0	100	0	0	1.00	UT	1,200.00	1,200.00	100	2018	2018	3	100	1,200	
2	0166	CONC,PAVMT	0	100	0	0	440.00	UT	2.00	2.00	100	2018	2018	3	100	880	
3	0280	POOL R/CON	0	100	0	0	313.00	UT	70.00	70.00	100	2022	2021		93	20,376	
4	0282	POOL ENCL	0	100	31	33	1,023.00	UT	15.00	15.00	100	2022	2021		75	11,509	

LAND DESCRIPTION

TOTAL OB/XF 33,965

LN	USE CODE	CLS	LAND USE DESCRIPTION	CAP	RD	LOC ZONE	FRONT	DEPTH	TOT LND UTS	UNIT TYPE	DT	DPTH FACT	% COND	TOT ADJ	UNIT PRICE	ADJ UNIT PRICE	LAND VALUE	OTHER ADJUSTMENTS AND NOTES	YEAR	DENSITY	DECL	FRZ	YR	CONSRV
1	0100	C	SFR	100		RSF-2	0.00	0.00	1.00	LT		1.00	1.00	1.00	40,000.00	40,000.00	40,000							

REVIEW DATE 05/18/2023 BY JB Total Acres: 2.04 Total Land Value: 40,000 Market: 0 Agricultural: 0 Common: 40,000 PRINTED 11/17/2025 BY SYS