LOT 70 & N 70 FT OF LOT 71 SPRIN
699-111, DC 1551-2008,

JANSON RANDALL L
144 NW PERKINS PL
LAKE CITY, FL 32055

2026

24-3S-16-02273-063

COLUMBIA COUNTY PROPERTY

BUILDING CHARACTERISTICS

ELEMENT	CD	CONSTRUCTION
Exterior Wall	10	ABOVE AVG. 100
Roof Structur	03	GABLE/HIP 100
Roof Cover	03	COMP SHNGL 100
Interior Wall	05	DRYWALL 100
Interior Floo	12	HARDWOOD 100
Air Condition	03	CENTRAL 100
Heating Type	04	AIR DUCTED 100
Bedrooms		4 100
Bathrooms		2 100
Frame	01	NONE 100
Stories	1.	1. 100
Architectual	05	CONV 100
Units		0 100
Condition Adj	03	03 100
Kitchen Adjus	01	01 100
Quality	06	06
DOR CODE	0100	SINGLE FAMILY
MAP NUM		MKT AREA 03
NEIGHBORHOOD/LOC	24316.010	1.00/

AREA TYPE	TOTAL GROSS AREA	PCT OF BASE	YEAR	TOT ADJ AREA	SUBAREA MARKET VALUE
BAS	2,167	100		2,167	179,689
FGR	441	55		243	20,150
FSP	120	40		48	3,980
FSP	360	40		144	11,941
UDG	440	55		242	20,067
TOTALS	3,528			2,844	235,826

MARKET ADJUSTMENTS

TYPE	MDL	EFF. AREA	TOT ADJ PTS	EFF. BASE RATE	REPL. COST NEW	AYB	EYB	ECON	FNCT		NORM	% COND
0100	01	2,844	113.9040	127.57	362,809	1983	1988	0	0	0	35.00	65.00

1 SINGLE FAM 100% - 0 Heated Area: 2167 HX Base Yr

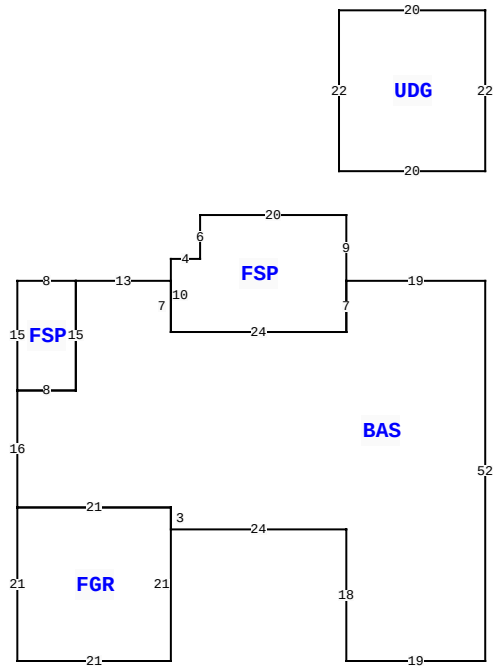

144 NW PERKINS PL, LAKE CITY

BLD DATE		LGL DATE	
XF DATE		LAND DATE	04/22/2025 MLU
INC DATE		AG DATE	

VALUATION SUMMARY

VALUATION BY		STANDARD
Tax Group: 2	Tax Dist:	
BUILDING MARKET VALUE		235,826
TOTAL MARKET OB/XF VALUE		5,500
TOTAL LAND VALUE - MARKET		48,000
TOTAL MARKET VALUE		289,326
SOH/AGL Deduction		100,281
ASSESSED VALUE		189,045
TOTAL EXEMPTION VALUE	HX HB WR	55,722
BASE TAXABLE VALUE		133,323
TOTAL JUST VALUE		289,326
NCON VALUE		0
INCOME VALUE		
PREVIOUS YEAR MKT VALUE		289,326

LAND:1:1: 0.89 AC.

PERMIT NUM	DESCRIPTION	AMT	ISSUED

SALES DATA

OFF RECORD Number	DATE	TYPE INST	Q U	V I	RSN CD	SALE PRICE
0699/0111	10/06/1989	WD	Q	I		120,000
GRANTOR: RUNNION						
GRANTEE: JANSON						
0511/0486	4/01/1983	WD	Q	V	01	9,500
GRANTOR:						
GRANTEE:						

BUILDING NOTES

BUILDING DIMENSIONS

BAS= W19 FSP= N9W20S6W4 S10 E24N7$S7W24N7W13 FSP= W8 S15 E8 N15$ S15 W8 S16 FGR= S21 E21 N21 W21$ E21 S3 E24 S18 E19 N52$ PTR=N15 UDG= N22 W20 S22 E20$ S15$.

EXTRA FEATURES

LN	OB/XF CODE	DESCRIPTION	BLD	CAP	L	W	UNITS	UT	Adj R	ADJ UNIT PRICE	ORIG COND	YEAR ON	YEAR ACTUAL	Q	% COND	OB/XF MKT VALUE	NOTES
1	0180	FPLC 1STRY	0	100	0	0	1.00	UT	2,000.00	2,000.00	100	0	0	3	100	2,000	
2	0166	CONC,PAVMT	0	100	0	0	1.00	UT	0.00	0.00	100	1993	1993	3	100	1,500	
3	0169	FENCE/WOOD	0	100	0	0	1.00	UT	0.00	0.00	100	2017	2017	3	100	2,000	

LAND DESCRIPTION

TOTAL OB/XF 5,500

LN	USE CODE	CLS	LAND USE DESCRIPTION	CAP	RD	LOC ZONE	FRONT	DEPTH	TOT LND UTS	UNIT TYPE	DT	DPTH FACT	% COND	TOT ADJ	UNIT PRICE	ADJ UNIT PRICE	LAND VALUE	OTHER ADJUSTMENTS AND NOTES	YEAR	DENSITY	DECL	FRZ	YR	CONSRV
1	0100	C	SFR	100		RSF-1	0.00	0.00	2.00	LT		1.00	1.00	1.00	24,000.00	24,000.00	48,000							

REVIEW DATE 05/18/2023 BY JB Total Acres: 0.86 Total Land Value: 48,000 Market: 0 Agricultural: 0 Common: 48,000 PRINTED 11/18/2025 BY SYS