LOTS 18 & 19 SPRING HOLLOW S/D.
381-91, 624-351, 826-2520, 843-1

VANN MATTHEW AUSTIN/WHITSON-VANN PAULA RENEE
344 NW SPRING HOLLOW BLVD
LAKE CITY, FL 32055

2026

24-3S-16-02273-011

COLUMBIA COUNTY PROPERTY

BUILDING CHARACTERISTICS

ELEMENT	CD	CONSTRUCTION
Exterior Wall	51	LOG 80
Exterior Wall	21	STONE 20
Roof Structur	08	IRREGULAR 100
Roof Cover	03	COMP SHNGL 100
Interior Wall	05	DRYWALL 50
Interior Wall	06	CUST PANEL 50
Interior Floo	12	HARDWOOD 90
Interior Floo	15	HARDTILE 10
Air Condition	03	CENTRAL 100
Heating Type	04	AIR DUCTED 100
Bedrooms		3 100
Bathrooms		3 100
Frame	02	WOOD FRAME 100
Stories	1.	1. 100
Architectual	05	CONV 100
Units		0 100
Condition Adj	03	03 100
Kitchen Adjus	01	01 100
Quality	06	06
DOR CODE	0100	SINGLE FAMILY
MAP NUM		MKT AREA 03
NEIGHBORHOOD/LOC	24316.010	1.00/

AREA TYPE	TOTAL GROSS AREA	PCT OF BASE	YEAR	TOT ADJ AREA	SUBAREA MARKET VALUE
BAS	1,536	100		1,536	186,553
FCP	432	25		108	13,117
FGR	504	55		277	33,643
FOP	192	30		58	7,044
FSP	128	40		51	6,194
FSP	128	40		51	6,194
FUS	752	100		752	91,333
UBM	874	20		175	21,254
UOP	128	20		26	3,157
UOP	128	20		26	3,157
TOTALS	5,290			3,180	386,223

MARKET ADJUSTMENTS

TYPE	MDL	EFF. AREA	TOT ADJ PTS	EFF. BASE RATE	REPL. COST NEW	AYB	EYB	ECON	FNCT		NORM	% COND
0900	01	3,180	129.7569	155.71	495,158	2003	2003	0	0	0	22.00	78.00

1 EXCEPT SFR 100% - 2025 Heated Area: 2288 HX Base Yr 2025

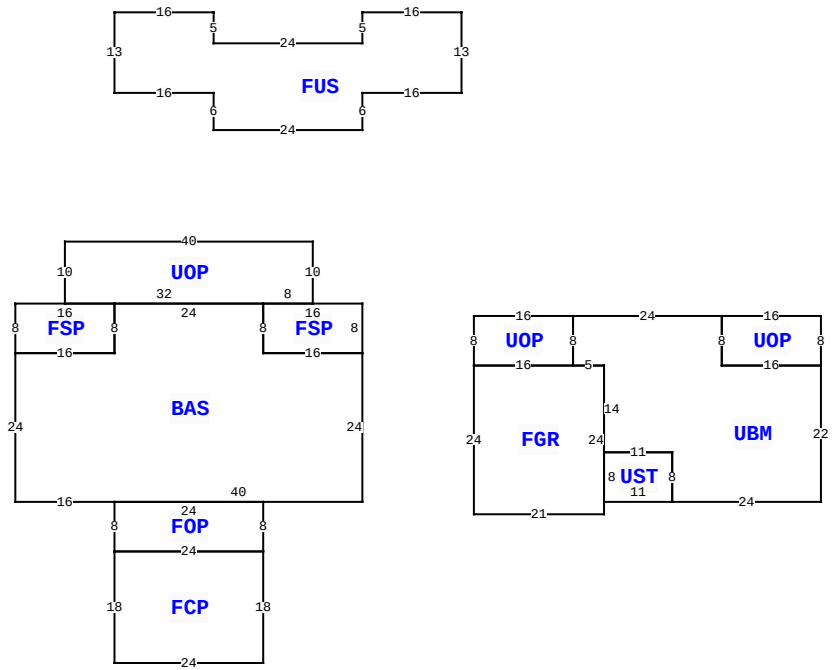

** This building has 12 Sub-Areas

344 NW SPRING HOLLOW BLVD, LAKE CITY

BLD DATE		LGL DATE	
XF DATE		LAND DATE	04/21/2025 MLU
INC DATE		AG DATE	

VALUATION SUMMARY

VALUATION BY		STANDARD
Tax Group: 2	Tax Dist:	
BUILDING MARKET VALUE		386,223
TOTAL MARKET OB/XF VALUE		7,734
TOTAL LAND VALUE - MARKET		48,000
TOTAL MARKET VALUE		441,957
SOH/AGL Deduction		89,052
ASSESSED VALUE		352,905
TOTAL EXEMPTION VALUE	HX HB	50,722
BASE TAXABLE VALUE		302,183
TOTAL JUST VALUE		441,957
NCON VALUE		0
INCOME VALUE		
PREVIOUS YEAR MKT VALUE		446,909

PERMIT NUM	DESCRIPTION	AMT	ISSUED
000046785	Roof Replacement	17,500	03/20/2023
19884	SFR	479	08/23/2002

SALES DATA

OFF RECORD Number	DATE	TYPE INST	Q U	V I	RSN CD	SALE PRICE
1507/667	1/31/2024	WD	Q	I	01	445,000
GRANTOR: HEIMS NORMAN K						
GRANTEE: VANN MATTHEW AUSTIN						
1473/2319	8/15/2022	WD	U	I	11	100
GRANTOR: 344 NW SPRING HOLLOW						
GRANTEE: HEIMS NORMAN K						

BUILDING NOTES

EXTRA FEATURES

LN	OB/XF CODE	DESCRIPTION	BLD	CAP	L	W	UNITS	UT	Adj R	ADJ UNIT PRICE	ORIG COND	YEAR ON	YEAR ACTUAL	Q	% COND	OB/XF MKT VALUE	NOTES
1	0190	FPLC PF	0	100	0	0	1.00	UT	1,200.00	1,200.00	100	2003	2003	3	100	1,200	
2	0166	CONC,PAVMT	0	100	0	0	4,084.00	UT	2.00	2.00	80	2003	2003	3	80	6,534	

BUILDING DIMENSIONS

BAS=[ORIG=0,0] N24 W16 N8 W24 S8 W16 S24 E16 E40 $
UBM=[ORIG=50,0] E24 N22 W16 N8 W24 S8 E5 S14 E11 S8 $
FUS=[ORIG=0,-60] N6 E16 N13 W16 S5 W24 N5 W16 S13 E16 S6 E24 $
FGR=[ORIG=34,-22] W16 S24 E21 N24 W5 $
FCP=[ORIG=-40,8] S18 E24 N18 W24 $
UOP=[ORIG=-16,-32] E8 N10 W40 S10 E32 $
FOP=[ORIG=-40,0] S8 E24 N8 W24 $
FSP=[ORIG=0,-24] N8 W16 S8 E16 $
FSP=[ORIG=-40,-32] W16 S8 E16 N8 $
UOP=[ORIG=74,-22] N8 W16 S8 E16 $
UOP=[ORIG=34,-30] W16 S8 E16 N8 $

LAND DESCRIPTION

TOTAL OB/XF 7,734

LN	USE CODE	CLS	LAND USE DESCRIPTION	CAP	RD	LOC ZONE	FRONT	DEPTH	TOT LND UTS	UNIT TYPE	DT	DPTH FACT	% COND	TOT ADJ	UNIT PRICE	ADJ UNIT PRICE	LAND VALUE	OTHER ADJUSTMENTS AND NOTES	YEAR	DENSITY	DECL	FRZ	YR	CONSRV
1	0100	C	SFR	100		RSF-1	0.00	0.00	2.00	LT		1.00	1.00	1.00	24,000.00	24,000.00	48,000							

REVIEW DATE 02/06/2024 BY TP Total Acres: 1.16 Total Land Value: 48,000 Market: 0 Agricultural: 0 Common: 48,000 PRINTED 11/17/2025 BY SYS