BEG NW COR, RUN E 1299.62 FT,
S 1335.31 FT, E 353.10 FT, S
897.14 FT TO N R/W CR-18, W

BROWN JAMES T JR/BROWN JOYE H
1043 SE COUNTY RD 18
LAKE CITY, FL 32024

2026

23-6S-17-09752-000

COLUMBIA COUNTY PROPERTY

BUILDING CHARACTERISTICS

ELEMENT	CD	CONSTRUCTION
Exterior Wall	32	HARDIE BRD 100
Roof Structur	03	GABLE/HIP 100
Roof Cover	03	COMP SHNGL 100
Interior Wall	05	DRYWALL 100
Interior Floo	14	CARPET 60
Interior Floo	15	HARDTILE 40
Air Condition	03	CENTRAL 100
Heating Type	04	AIR DUCTED 100
Bedrooms		3 100
Bathrooms		3 100
Frame	02	WOOD FRAME 100
Stories	1.5	1.5 100
Architectual	05	CONV 100
Units		0 100
Condition Adj	03	03 100
Quality	05	05
DOR CODE	5000	IMPROVED AG
MAP NUM		MKT AREA 02
NEIGHBORHOOD/LOC	23617.00	1.00/

AREA TYPE	TOTAL GROSS AREA	PCT OF BASE	YEAR	TOT ADJ AREA	SUBAREA MARKET VALUE
BAS	3,942	100		3,942	409,142
FAT	1,332	20		266	27,608
FGR	450	55		248	25,740
FOP	48	30		14	1,453
FOP	474	30		142	14,739
FOP	717	30		215	22,315
TOTALS	6,963			4,827	500,996

MARKET ADJUSTMENTS

TYPE	MDL	EFF. AREA	TOT ADJ PTS	EFF. BASE RATE	REPL. COST NEW	AYB	EYB	ECON	FNCT		NORM	% COND
0100	01	4,827	110.3235	123.56	596,424	2009	2009	0	0	0	16.00	84.00

2 SINGLE FAM 100% - 0 Heated Area: 3942 HX Base Yr

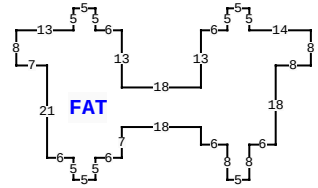

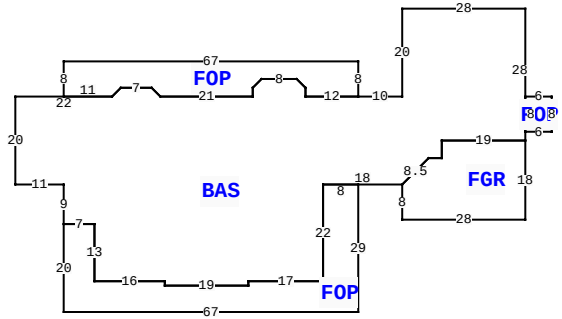

1043 SE COUNTY ROAD 18 , LAKE CITY

BLD DATE		LGL DATE	
XF DATE		LAND DATE	04/10/2025 MLU
INC DATE		AG DATE	

VALUATION SUMMARY

VALUATION BY		STANDARD
Tax Group: 3	Tax Dist:	
BUILDING MARKET VALUE		500,996
TOTAL MARKET OB/XF VALUE		22,684
TOTAL LAND VALUE - MARKET		347,625
TOTAL MARKET VALUE		549,020
SOH/AGL Deduction		214,077
ASSESSED VALUE		334,943
TOTAL EXEMPTION VALUE	HX HB WX	55,722
BASE TAXABLE VALUE		279,221
TOTAL JUST VALUE		871,305
NCON VALUE		0
INCOME VALUE		
PREVIOUS YEAR MKT VALUE		877,269

PERMIT NUM	DESCRIPTION	AMT	ISSUED
26364	SFR	1,152	10/25/2007
6052	M H	23,000	05/22/1992

SALES DATA

OFF RECORD Number	DATE	TYPE INST	Q U	V I	RSN CD	SALE PRICE
0785/1656	1/31/1994	WD	U	I	35	77,500
GRANTOR: CLIFFORD DICKS						
GRANTEE: JAMES T BROWN						
0653/0527	5/31/1988	AD	U	I	09	57,500
GRANTOR: DICKS CLIFFORD						
GRANTEE: BROWN JAMES						

BUILDING NOTES

BUILDING DIMENSIONS

BAS= W28 S20 W10 FOP= N8 W67 S8 E11 R2 U2 E7 D2 R2 E21 N2 R2 U2 E8 D2 R2 S2 E12$ W12 N2 L2 U2 W8 D2 L2 S2 W21 L2 U2 W7 D2 L2 W22 S20 E11 S9 FOP= S20 E67 N29 W8 S22 W17 S1 W19 N1 W16 N13 W7$ E7 S13 E16 S1 E19 N1 E17 N22 E18 FGR= S8 E28 N18 W19 S4 W3 L6 D6 $ U6 R6 E3 N4 E19 N2 FOP= E6 N8 W6 S8$ N28$ PTR= N40 FAT= N8 E6 N18 E8 N8 W14 N5 W5 S5 W6 S13 W18 N13 W6 N5 W5 S5 W13 S8 E7 S21 E6 S5 E5 N5 E6 N7 E18 S4 E6 S8 E5$ S40$.

EXTRA FEATURES

LN	OB/XF CODE	DESCRIPTION	BLD	CAP	L	W	UNITS	UT	Adj R	ADJ UNIT PRICE	ORIG COND	YEAR ON	YEAR ACTUAL	Q	% COND	OB/XF MKT VALUE	NOTES
1	0020	BARN,FR	0	100	55	26	1.00	UT	6,000.00	6,000.00	100	0	0	3	100	6,000	
2	0040	BARN,POLE	0	100	30	38	1.00	UT	0.00	0.00	100	1993	1993	3	100	500	
3	0260	PAVEMENT-A	0	100	0	0	20,100.00	UT	0.44	0.44	100	2005	2005	3	100	8,844	
4	0040	BARN,POLE	0	100	8	17	136.00	UT	2.50	2.50	100	2005	2005	3	100	340	
5	9945	Well/Sept	0	100	0	0	1.00	UT	7,000.00	7,000.00	100			3	100	7,000	

LAND DESCRIPTION

TOTAL OB/XF 22,684

LN	USE CODE	CLS	LAND USE DESCRIPTION	CAP	RD	LOC ZONE	FRONT	DEPTH	TOT LND UTS	UNIT TYPE	DT	DPTH FACT	% COND	TOT ADJ	UNIT PRICE	ADJ UNIT PRICE	LAND VALUE	OTHER ADJUSTMENTS AND NOTES	YEAR	DENSITY	DECL	FRZ	YR	CONSRV
1	0102	C	SFR/MH	100		A-1	0.00	0.00	1.00	AC		1.00	1.00	1.00	4,500.00	4,500.00	4,500							
2	6200	A	PASTURE 3	0		A-1	0.00	0.00	74.25	AC		1.00	1.00	1.00	280.00	280.00	20,790							
3	5997	A	RIVERS/BAYS/	0		A-1	0.00	0.00	2.00	AC		1.00	1.00	1.00	25.00	25.00	50							
4	9910	M	MKT.VAL.AG	0		A-1	0.00	0.00	76.25	AC		1.00	1.00	1.00	4,500.00	4,500.00	343,125							

REVIEW DATE 10/13/2017 BY DF Total Acres: 77.25 Total Land Value: 25,340 Market: 343,125 Agricultural: 20,840 Common: 4,500 PRINTED 09/30/2025 BY SYS