COMM AT SE COR OF SEC, RUN N
987.76 FT, S72W 301.96 FT,
S39W 254.33 FT, S71W 205.37 FT

VINSON MICHAEL D JR/VINSON APRIL
288 SW WISE DR
LAKE CITY, FL 32024-6309

2026

23-4S-16-03095-007

COLUMBIA COUNTY PROPERTY

BUILDING CHARACTERISTICS

ELEMENT	CD	CONSTRUCTION
Exterior Wall	32	HARDIE BRD 100
Roof Structur	08	IRREGULAR 100
Roof Cover	12	MODULAR MT 100
Interior Wall	05	DRYWALL 100
Interior Floo	14	CARPET 80
Interior Floo	12	HARDWOOD 20
Air Condition	03	CENTRAL 100
Heating Type	04	AIR DUCTED 100
Bedrooms		4 100
Bathrooms		2.5 100
Frame	02	WOOD FRAME 100
Stories	2.	2. 100
Architectual	05	CONV 100
Units		0 100
Quality	07	07

DOR CODE	5000	IMPROVED AG	
MAP NUM		MKT AREA	06
NEIGHBORHOOD/LOC	23416.00	1.00/	

AREA TYPE	TOTAL GROSS AREA	PCT OF BASE	YEAR	TOT ADJ AREA	SUBAREA MARKET VALUE
BAS	2,530	100		2,530	328,002
FGR	702	55		386	50,043
FHS	378	60		227	29,429
FOP	144	30		43	5,575
FOP	354	30		106	13,742
TOTALS	4,108			3,292	426,792

MARKET ADJUSTMENTS

TYPE	MDL	EFF. AREA	TOT ADJ PTS	EFF. BASE RATE	REPL. COST NEW	AYB	EYB	ECON	FNCT		NORM	% COND
0100	01	3,292	128.6162	144.05	474,213	2015	2015	0	0	0	10.00	90.00

1 SINGLE FAM 100% - 2016 Heated Area: 2908 HX Base Yr 2016

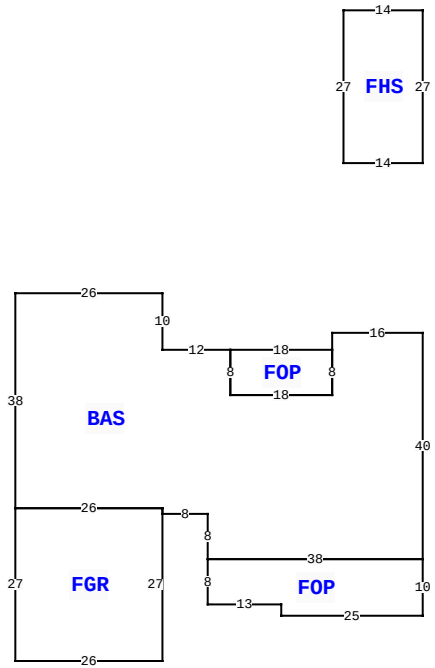

288 SW WISE DR, LAKE CITY

BLD DATE		LGL DATE	
XF DATE		LAND DATE	04/09/2025 MLU
INC DATE		AG DATE	

VALUATION SUMMARY

VALUATION BY		STANDARD
Tax Group: 2	Tax Dist:	
BUILDING MARKET VALUE		426,792
TOTAL MARKET OB/XF VALUE		18,020
TOTAL LAND VALUE - MARKET		72,000
TOTAL MARKET VALUE		509,702
SOH/AGL Deduction		167,843
ASSESSED VALUE		341,859
TOTAL EXEMPTION VALUE	HX HB VX	55,722
BASE TAXABLE VALUE		286,137
TOTAL JUST VALUE		516,812
NCON VALUE		0
INCOME VALUE		
PREVIOUS YEAR MKT VALUE		521,554

PERMIT NUM	DESCRIPTION	AMT	ISSUED
000049762	Swimming Pool and	69,000	05/09/2024
000044817	Roof Replacement	32,900	06/27/2022
32502	SFR	1,120	12/02/2014

SALES DATA

OFF RECORD Number	DATE	TYPE INST	Q U	V I	RSN CD	SALE PRICE
1278/1031	7/25/2014	WD	U	V	18	119,800
GRANTOR: PEOPLES STATE BANK						
GRANTEE: MICHAEL D JR & APRI						
1259/2735	8/16/2013	QC	U	V	11	374,400
GRANTOR: PETER W GIEBEIG						
GRANTEE: PEOPLES STATE BANK						

BUILDING NOTES

BUILDING DIMENSIONS

BAS= W16 S3 FOP= W18 S8 E18 N8$ S8 W18 N8 W12 N10 W26 S38
FGR= S27 E26 N27 W26$ E26 S1 E8 S8 FOP= S8 E13 S2 E25 N10
W38$ E38 N40$ PTR= N30 FHS= N27 W14 S27 E14$ S30$.

EXTRA FEATURES

LN	OB/XF CODE	DESCRIPTION	BLD	CAP	L	W	UNITS	UT	Adj R	ADJ UNIT PRICE	ORIG COND	YEAR ON	YEAR ACTUAL	Q	% COND	OB/XF MKT VALUE	NOTES
1	0190	FPLC PF	0	100	0	0	1.00	UT	1,200.00	1,200.00	100	2015	2015	3	100	1,200	
2	0296	SHED METAL	0	100	0	0	720.00	UT	9.00	9.00	100	2015	2015	3	100	6,480	
3	0166	CONC,PAVMT	0	100	0	0	1,170.00	UT	2.00	2.00	100	2015	2015	3	100	2,340	
4	0040	BARN,POLE	0	100	0	0	1.00	UT	8,000.00	8,000.00	100	2025	2024		100	8,000	

LAND DESCRIPTION

TOTAL OB/XF 18,020

LN	USE CODE	CLS	LAND USE DESCRIPTION	CAP	RD	LOC ZONE	FRONT	DEPTH	TOT LND UTS	UNIT TYPE	DT	DPTH FACT	% COND	TOT ADJ	UNIT PRICE	ADJ UNIT PRICE	LAND VALUE	OTHER ADJUSTMENTS AND NOTES	YEAR	DENSITY	DECL	FRZ	YR	CONSRV
1	0100	C	SFR	100		A-1	0.00	0.00	8.00	AC		1.00	1.00	1.00	8,000.00	8,000.00	64,000							
2	5500	A	TIMBER 2	0		A-1	0.00	0.00	2.00	AC		1.00	1.00	1.00	445.00	445.00	890							
3	9910	M	MKT.VAL.AG	0		A-1	0.00	0.00	2.00	AC		1.00	1.00	1.00	4,000.00	4,000.00	8,000							

REVIEW DATE 03/06/2025 BY KS Total Acres: 10.00 Total Land Value: 64,890 Market: 8,000 Agricultural: 890 Common: 64,000 PRINTED 11/17/2025 BY SYS