LOT 4 BLOCK A LAKEWOOD ESTATES
S/D UNIT II REPLAT.

GAMMAGE JONNY L/GAMMAGE NARVES
190 NW OMAHA WAY
LAKE CITY, FL 32055

2026

23-3S-16-02272-154

COLUMBIA COUNTY PROPERTY

BUILDING CHARACTERISTICS

ELEMENT	CD	CONSTRUCTION
Exterior Wall	17	MSNRY STUC 100
Roof Structur	08	IRREGULAR 100
Roof Cover	03	COMP SHNGL 100
Interior Wall	05	DRYWALL 100
Interior Floo	14	CARPET 90
Interior Floo	08	SHT VINYL 10
Air Condition	03	CENTRAL 100
Heating Type	04	AIR DUCTED 100
Bedrooms		4 100
Bathrooms		3 100
Frame	01	NONE 100
Stories	1.	1. 100
Architectual	05	CONV 100
Units		0 100
Condition Adj	03	03 100
Kitchen Adjus	01	01 100
Quality	07	07
DOR CODE	0100	SINGLE FAMILY
MAP NUM		MKT AREA 06
NEIGHBORHOOD/LOC	23316.030	1.00/

AREA TYPE	TOTAL GROSS AREA	PCT OF BASE	YEAR	TOT ADJ AREA	SUBAREA MARKET VALUE
BAS	2,384	100		2,384	221,395
FGR	616	55		339	31,482
FOP	66	30		20	1,857
FOP	72	30		22	2,043
PTO	232	5		12	1,114
TOTALS	3,370			2,777	257,892

MARKET ADJUSTMENTS

TYPE	MDL	EFF. AREA	TOT ADJ PTS	EFF. BASE RATE	REPL. COST NEW	AYB	EYB	ECON	FNCT		NORM	% COND
0100	01	2,777	120.1728	134.59	373,756	1994	1994	0	0	0	31.00	69.00

1 SINGLE FAM 0% - 2025 Heated Area: 2384 HX Base Yr

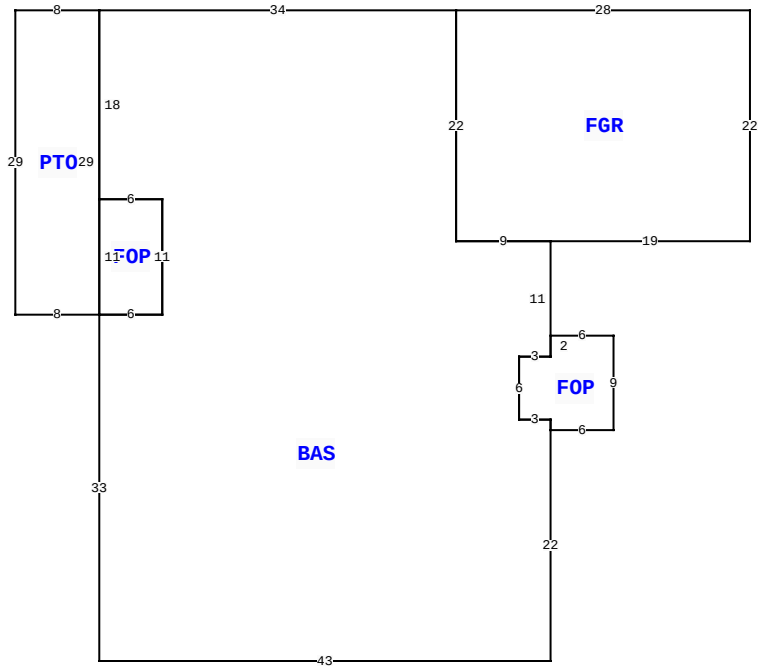

190 NW OMAHA WAY, LAKE CITY

BLD DATE		LGL DATE	
XF DATE		LAND DATE	04/03/2025 MLU
INC DATE		AG DATE	

VALUATION SUMMARY

VALUATION BY	STANDARD
Tax Group: 2	Tax Dist:
BUILDING MARKET VALUE	257,892
TOTAL MARKET OB/XF VALUE	6,429
TOTAL LAND VALUE - MARKET	35,000
TOTAL MARKET VALUE	299,321
SOH/AGL Deduction	0
ASSESSED VALUE	299,321
TOTAL EXEMPTION VALUE	0
BASE TAXABLE VALUE	299,321
TOTAL JUST VALUE	299,321
NCON VALUE	0
INCOME VALUE	
PREVIOUS YEAR MKT VALUE	303,058

PERMIT NUM	DESCRIPTION	AMT	ISSUED
000049065	Roof Replacement	17,000	01/23/2024
8054	SFR	70,000	02/10/1994

SALES DATA

OFF RECORD Number	DATE	TYPE INST	Q U /	V I /	RSN CD	SALE PRICE
0876/2051	3/12/1999	WD	Q	I		150,000
GRANTOR: KESTERKE						
GRANTEE: GAMMAGE						
0784/1896	1/07/1994	WD	U	V	12	7,000
GRANTOR: BULLARD-DEAS						
GRANTEE: MARILYN KESTERKE						

BUILDING NOTES

BUILDING DIMENSIONS

BAS= W34 PTO= W8 S29 E8 N29$S18 FOP= S11 E6 N11 W6$ E6 S11 W6 S33 E43 N22 FOP= E6 N9W6 S2 W3 S6 E3 S1$ N1 W3 N6 E3N11 FGR= E19 N22 W28 S22 E9$ W9 N22$.

EXTRA FEATURES

LN	OB/XF CODE	DESCRIPTION	BLD	CAP	L	W	UNITS	UT	Adj R	ADJ UNIT PRICE	ORIG COND	YEAR ON	YEAR ACTUAL	Q	% COND	OB/XF MKT VALUE	NOTES
1	0180	FPLC 1STRY	0	0	0	0	1.00	UT	2,000.00	2,000.00	100	0	0	3	100	2,000	
2	0166	CONC,PAVMT	0	0	0	0	2,891.00	UT	1.50	1.50	80	0	0	3	80	3,469	
3	0296	SHED METAL	0	0	12	16	192.00	UT	5.00	5.00	100	1994	1994	3	100	960	

LAND DESCRIPTION

TOTAL OB/XF 6,429

LN	USE CODE	CLS	LAND USE DESCRIPTION	CAP	RD	LOC ZONE	FRONT	DEPTH	TOT LND UTS	UNIT TYPE	DT	DPTH FACT	% COND	TOT ADJ	UNIT PRICE	ADJ UNIT PRICE	LAND VALUE	OTHER ADJUSTMENTS AND NOTES	YEAR	DENSITY	DECL	FRZ	YR	CONSRV
1	0100	C	SFR	0		RSF-2	0.00	0.00	1.00	LT		1.00	1.00	1.00	35,000.00	35,000.00	35,000							

REVIEW DATE 05/15/2023 BY JB Total Acres: 1.33 Total Land Value: 35,000 Market: 0 Agricultural: 0 Common: 35,000 PRINTED 11/18/2025 BY SYS