LOT 10 LAKE JEFFERY PHASE 1.
713-160, 926-1780, WD 1103-2443,

LUTZ JOY L/LUTZ OWEN
320 NW AUBURN PL
LAKE CITY, FL 32055

2026

23-3S-16-02272-011

COLUMBIA COUNTY PROPERTY

BUILDING CHARACTERISTICS

ELEMENT	CD	CONSTRUCTION
Exterior Wall	19	COMMON BRK 100
Roof Structur	08	IRREGULAR 100
Roof Cover	03	COMP SHNGL 100
Interior Wall	05	DRYWALL 100
Interior Floo	14	CARPET 50
Interior Floo	15	HARDTILE 50
Air Condition	03	CENTRAL 100
Heating Type	04	AIR DUCTED 100
Bedrooms		4 100
Bathrooms		3 100
Frame	01	NONE 100
Stories	2.	2. 100
Architectual	05	CONV 100
Units		0 100
Condition Adj	03	03 100
Kitchen Adjus	01	01 100
Quality	07	07
DOR CODE	0100	SINGLE FAMILY
MAP NUM		MKT AREA 06
NEIGHBORHOOD/LOC	23316.020	1.00/

AREA TYPE	TOTAL GROSS AREA	PCT OF BASE	YEAR	TOT ADJ AREA	SUBAREA MARKET VALUE
BAS	1,668	100		1,668	162,576
FGR	876	55		482	46,979
FOP	60	30		18	1,754
FOP	140	30		42	4,094
FUS	1,544	100		1,544	150,490
PTO	160	5		8	780
TOTALS	4,448			3,762	366,673

MARKET ADJUSTMENTS

TYPE	MDL	EFF. AREA	TOT ADJ PTS	EFF. BASE RATE	REPL. COST NEW	AYB	EYB	ECON	FNCT		NORM	% COND
0100	01	3,762	133.8818	149.95	564,112	1990	1990	0	0	0	35.00	65.00

1 SINGLE FAM 100% - 2025 Heated Area: 3212 HX Base Yr 2025

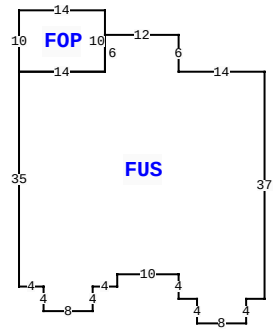

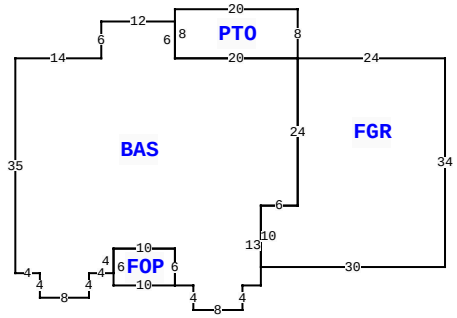

320 NW AUBURN PL, LAKE CITY

BLD DATE		LGL DATE	
XF DATE		LAND DATE	04/03/2025 MLU
INC DATE		AG DATE	

VALUATION SUMMARY

VALUATION BY		STANDARD
Tax Group: 2	Tax Dist:	
BUILDING MARKET VALUE		366,673
TOTAL MARKET OB/XF VALUE		47,846
TOTAL LAND VALUE - MARKET		61,250
TOTAL MARKET VALUE		475,769
SOH/AGL Deduction		70,340
ASSESSED VALUE		405,429
TOTAL EXEMPTION VALUE	HX HB	50,722
BASE TAXABLE VALUE		354,707
TOTAL JUST VALUE		475,769
NCON VALUE		0
INCOME VALUE		
PREVIOUS YEAR MKT VALUE		481,710

PERMIT NUM	DESCRIPTION	AMT	ISSUED
19628	POOL	175	06/10/2002

SALES DATA

OFF RECORD Number	DATE	TYPE INST	Q U	V I	RSN CD	SALE PRICE
1520/524	7/24/2024	WD	Q	I	01	585,000
GRANTOR: NUNES JOHN F						
GRANTEE: LUTZ JOY L						
1390/2322	7/31/2019	WD	Q	I	01	320,000
GRANTOR: JAMES H RIVERS						
GRANTEE: JOHN F & CAROL A NU						

BUILDING NOTES

BUILDING DIMENSIONS

FGR= W24 PTO= N8 W20 S8 E20$BAS= W20 N6 W12 S6 W14 S35 E4S4 E8 N4 E4 N4 E10 S6 FOP= N6W10 S6 E10$ E3 S4 E8 N4 E3 N13E6 N24$ S24 W6 S10 E30 N34$ PTR=N20 FUS= E4 S4 E8 N4 E4 N2 E10 S4 E3 S4 E8 N4 E3 N37 W14 N6 W12 S6 W14 FOP= E14 N10 W14 S10$ S35$ S20$.

EXTRA FEATURES

LN	OB/XF CODE	DESCRIPTION	BLD	CAP	L	W	UNITS	UT	Adj R	ADJ UNIT PRICE	ORIG COND	YEAR ON	YEAR ACTUAL	Q	% COND	OB/XF MKT VALUE	NOTES
1	0166	CONC,PAVMT	0	100	0	0	1.00	UT	0.00	0.00	100	0	0	3	100	3,500	
2	0170	FPLC 2STRY	0	100	0	0	1.00	UT	2,750.00	2,750.00	100	0	0	3	100	2,750	
3	0280	POOL R/CON	0	100	0	0	756.00	UT	70.00	70.00	100	2002	2002	3	40	21,168	
4	0166	CONC,PAVMT	0	100	50	52	1,844.00	UT	3.00	3.00	100	2002	2002	3	100	5,532	
5	0011	BARN,BLK A	0	100	11	15	165.00	UT	14.00	14.00	100	2002	2002	3	100	2,310	
6	0252	LEAN-TO W/	0	100	0	0	1.00	UT	0.00	0.00	100	2009	2009	3	100	50	
7	0252	LEAN-TO W/	0	100	0	0	1.00	UT	0.00	0.00	100	2009	2009	3	100	50	
8	0083	DOCK-LAKE	0	100	4	109	436.00	UT	11.50	11.50	100	2009	2009	3	40	2,006	
9	0169	FENCE/WOOD	0	100	0	0	240.00	UT	13.50	13.50	100	2009	2009	3	100	3,240	
10	0120	CLFENCE 4	0	100	0	0	160.00	UT	6.50	6.50	100	2009	2009	3	100	1,040	

LAND DESCRIPTION

TOTAL OB/XF 41,646

LN	USE CODE	CLS	LAND USE DESCRIPTION	CAP	RD	LOC ZONE	FRONT	DEPTH	TOT LND UTS	UNIT TYPE	DT	DPTH FACT	% COND	TOT ADJ	UNIT PRICE	ADJ UNIT PRICE	LAND VALUE	OTHER ADJUSTMENTS AND NOTES	YEAR	DENSITY	DECL	FRZ	YR	CONSRV
1	0100	C	SFR	100		RSF-2	0.00	0.00	1.00	LT		1.00	1.00	1.75	35,000.00	61,250.00	61,250							

REVIEW DATE 08/13/2024 BY ME Total Acres: 1.71 Total Land Value: 61,250 Market: 0 Agricultural: 0 Common: 61,250 PRINTED 11/18/2025 BY SYS

LOT 10 LAKE JEFFERY PHASE 1.

713-160, 926-1780, WD 1103-2443,

LUTZ JOY L/LUTZ OWEN
320 NW AUBURN PL
LAKE CITY, FL 32055

2026

23-3S-16-02272-011

COLUMBIA COUNTY PROPERTY

BUILDING CHARACTERISTICS

ELEMENT	CD	CONSTRUCTION

DOR CODE	0100	SINGLE FAMILY	
MAP NUM		MKT AREA	06
NEIGHBORHOOD/LOC	23316.020 1.00/		

AREA TYPE	TOTAL GROSS AREA	PCT OF BASE	YEAR	TOT ADJ AREA	SUBAREA MARKET VALUE
TOTALS					

MARKET ADJUSTMENTS

TYPE	MDL	EFF. AREA	TOT ADJ PTS	EFF. BASE RATE	REPL. COST NEW	AYB	EYB	ECON	FNCT		NORM	% COND

VALUATION SUMMARY

VALUATION BY		STANDARD
Tax Group: 2	Tax Dist:	
BUILDING MARKET VALUE		366,673
TOTAL MARKET OB/XF VALUE		47,846
TOTAL LAND VALUE - MARKET		61,250
TOTAL MARKET VALUE		475,769
SOH/AGL Deduction		70,340
ASSESSED VALUE		405,429
TOTAL EXEMPTION VALUE	HX HB	50,722
BASE TAXABLE VALUE		354,707
TOTAL JUST VALUE		475,769
NCON VALUE		0
INCOME VALUE		
PREVIOUS YEAR MKT VALUE		481,710

PERMIT NUM	DESCRIPTION	AMT	ISSUED

SALES DATA

OFF RECORD Number	DATE	TYPE INST	Q U /	V I /	RSN CD	SALE PRICE
1520/524	7/24/2024	WD	Q	I	01	585,000
GRANTOR: NUNES JOHN F						
GRANTEE: LUTZ JOY L						
1390/2322	7/31/2019	WD	Q	I	01	320,000
GRANTOR: JAMES H RIVERS						
GRANTEE: JOHN F & CAROL A NU						

BLD DATE		LGL DATE	
XF DATE		LAND DATE	04/03/2025 MLU
INC DATE		AG DATE	

BUILDING NOTES

BUILDING DIMENSIONS

EXTRA FEATURES

LN	OB/XF CODE	DESCRIPTION	BLD	CAP	L	W	UNITS	UT	Adj R	ADJ UNIT PRICE	ORIG COND	YEAR ON	YEAR ACTUAL	Q	% COND	OB/XF MKT VALUE	NOTES
11	0296	SHED METAL	0	100	0	0	1.00	UT	0.00	0.00	100	2009	2009	3	100	500	
12	0294	SHED WOOD/	0	100	0	0	1.00	UT	0.00	0.00	100	2009	2009	3	100	900	
13	0104	GENERATOR	0	100	0	0	1.00	UT	6,000.00	6,000.00	100	2023	2022		80	4,800	

LAND DESCRIPTION

TOTAL OB/XF 6,200

LN	USE CODE	CLS	LAND USE DESCRIPTION	CAP	RD	LOC ZONE	FRONT	DEPTH	TOT LND UTS	UNIT TYPE	DT	DPTH FACT	% COND	TOT ADJ	UNIT PRICE	ADJ UNIT PRICE	LAND VALUE	OTHER ADJUSTMENTS AND NOTES	YEAR	DENSITY	DECL	FRZ	YR	CONSRV

REVIEW DATE 08/13/2024 BY ME Total Acres: 1.71 Total Land Value: 61,250 Market: 0 Agricultural: 0 Common: 61,250 PRINTED 11/18/2025 BY SYS