COMM SE COR LOT 19, BLOCK 3
MASON CITY, RUN N 775.53 FT, E
590.73 FT, CONT E 523.14 FT TO

HAYNES TYLER
289 SE JAMES FEAGLE LANE
LAKE CITY, FL 32025

2026

22-5S-17-09328-004

COLUMBIA COUNTY PROPERTY

BUILDING CHARACTERISTICS

ELEMENT	CD	CONSTRUCTION
Exterior Wall	32	HARDIE BRD 100
Roof Structur	08	IRREGULAR 100
Roof Cover	03	COMP SHNGL 100
Interior Wall	05	DRYWALL 100
Interior Floo	12	HARDWOOD 80
Interior Floo	15	HARDTILE 20
Air Condition	03	CENTRAL 100
Heating Type	04	AIR DUCTED 100
Bedrooms		3 100
Bathrooms		2 100
Frame	02	WOOD FRAME 100
Stories	1.	1. 100
Architectual	05	CONV 100
Units		0 100
Quality	07	07
DOR CODE	0100	SINGLE FAMILY
MAP NUM		MKT AREA 02
NEIGHBORHOOD/LOC	22517.00	1.00/

AREA TYPE	TOTAL GROSS AREA	PCT OF BASE	YEAR	TOT ADJ AREA	SUBAREA MARKET VALUE
BAS	2,263	100		2,263	294,748
FGR	672	55		370	48,192
FOP	70	30		21	2,735
FOP	70	30		21	2,735
FOP	180	30		54	7,034
TOTALS	3,255			2,729	355,442

MARKET ADJUSTMENTS

TYPE	MDL	EFF. AREA	TOT ADJ PTS	EFF. BASE RATE	REPL. COST NEW	AYB	EYB	ECON	FNCT		NORM	% COND
0100	01	2,729	125.0480	140.05	382,196	2018	2018	0	0	0	7.00	93.00

1 SINGLE FAM 100% - 2019 Heated Area: 2263 HX Base Yr 2019

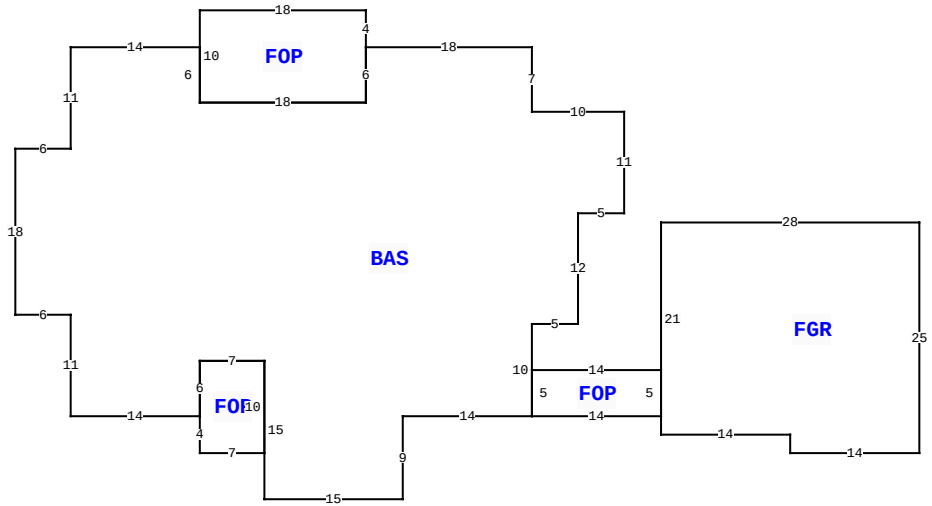

289 SE JAMES FEAGLE LN, LAKE CITY

BLD DATE		LGL DATE	
XF DATE		LAND DATE	04/07/2025 MLU
INC DATE		AG DATE	

VALUATION SUMMARY

VALUATION BY		STANDARD
Tax Group: 3	Tax Dist:	
BUILDING MARKET VALUE		355,442
TOTAL MARKET OB/XF VALUE		800
TOTAL LAND VALUE - MARKET		96,235
TOTAL MARKET VALUE		452,477
SOH/AGL Deduction		146,959
ASSESSED VALUE		305,518
TOTAL EXEMPTION VALUE	HX HB	50,722
BASE TAXABLE VALUE		254,796
TOTAL JUST VALUE		452,477
NCON VALUE		0
INCOME VALUE		
PREVIOUS YEAR MKT VALUE		456,299

PERMIT NUM	DESCRIPTION	AMT	ISSUED
35900	SFR	1,107	10/19/2017

SALES DATA

OFF RECORD Number	DATE	TYPE INST	Q U	V I	RSN CD	SALE PRICE
1325/2429	11/15/2016	WD	Q	V	01	47,000
GRANTOR: VERONICA DIXON						
GRANTEE: TYLER HAYNES						
1028/2708	10/22/2004	WD	Q	V	03	100
GRANTOR: ARGUS ENTERPRISES						
GRANTEE: VERONICA DIXON						

BUILDING NOTES

BUILDING DIMENSIONS

BAS= W18 FOP= N4 W18 S10 E18 N6$ S6 W18 N6 W14 S11 W6 S18 E6 S11 E14 FOP= S4 E7 N10 W7 S6$ N6 E7 S15 E15 N9 E14 FOP= E14 FGR= S2 E14 S2 E14 N25 W28 S21 $ N5 W14 S5 $ N10 E5 N12 E5 N11 W10 N7$.

EXTRA FEATURES

LN	OB/XF CODE	DESCRIPTION	BLD	CAP	L	W	UNITS	UT	Adj R	ADJ UNIT PRICE	ORIG COND	YEAR ON	YEAR ACTUAL	Q	% COND	OB/XF MKT VALUE	NOTES
1	0166	CONC,PAVMT	0	100	0	0	400.00	UT	2.00	2.00	100	2018	2018	3	100	800	

LAND DESCRIPTION

TOTAL OB/XF 800

LN	USE CODE	CLS	LAND USE DESCRIPTION	CAP	RD	LOC ZONE	FRONT	DEPTH	TOT LND UTS	UNIT TYPE	DT	DPTH FACT	% COND	TOT ADJ	UNIT PRICE	ADJ UNIT PRICE	LAND VALUE	OTHER ADJUSTMENTS AND NOTES	YEAR	DENSITY	DECL	FRZ	YR	CONSRV
1	0100	C	SFR	100		A-1	0.00	0.00	10.13	AC		1.00	1.00	1.00	9,500.00	9,500.00	96,235							

REVIEW DATE 01/09/2019 BY HC Total Acres: 10.13 Total Land Value: 96,235 Market: 0 Agricultural: 0 Common: 96,235 PRINTED 11/17/2025 BY SYS