LOT 10 LAKE CITY AIRPARK S/D.
ORB 455-602, UNREC DC TYRONE

DURHAM BARBARA L
493 SW AVIATION DR
LAKE CITY, FL 32025

2026

22-5S-17-09322-010

COLUMBIA COUNTY PROPERTY

BUILDING CHARACTERISTICS

ELEMENT	CD	CONSTRUCTION
Exterior Wall	19	COMMON BRK 100
Roof Structur	03	GABLE/HIP 100
Roof Cover	03	COMP SHNGL 100
Interior Wall	05	DRYWALL 100
Interior Floo	14	CARPET 100
Air Condition	03	CENTRAL 100
Heating Type	04	AIR DUCTED 100
Bedrooms		3 100
Bathrooms		2 100
Frame	01	NONE 100
Stories	1.	1. 100
Architectual	05	CONV 100
Units		0 100
Condition Adj	03	03 100
Kitchen Adjus	01	01 100
Quality	05	05
DOR CODE	0100	SINGLE FAMILY
MAP NUM		MKT AREA 02
NEIGHBORHOOD/LOC	22517.020	1.00/

AREA TYPE	TOTAL GROSS AREA	PCT OF BASE	YEAR	TOT ADJ AREA	SUBAREA MARKET VALUE
BAS	2,398	100		2,398	187,699
FGR	550	55		302	23,639
FOP	32	30		10	783
FSP	780	40		312	24,421
HGR	1,680	45		756	59,175
TOTALS	5,440			3,778	295,716

MARKET ADJUSTMENTS

TYPE	MDL	EFF. AREA	TOT ADJ PTS	EFF. BASE RATE	REPL. COST NEW	AYB	EYB	ECON	FNCT		NORM	% COND
0100	01	3,778	107.5200	120.42	454,947	1981	1981	0	0	0	35.00	65.00

1 SINGLE FAM 100% - 0 Heated Area: 2398 HX Base Yr

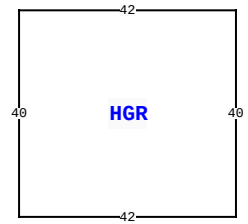

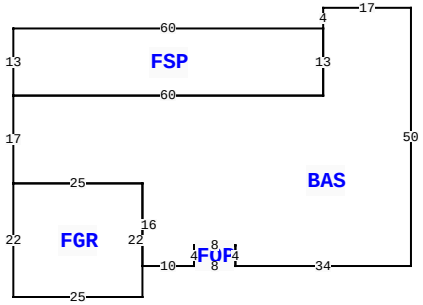

493 SW AVIATION DR, LAKE CITY

BLD DATE		LGL DATE	
XF DATE		LAND DATE	04/07/2025 MLU
INC DATE		AG DATE	

VALUATION SUMMARY

VALUATION BY		STANDARD
Tax Group: 3	Tax Dist:	
BUILDING MARKET VALUE		295,716
TOTAL MARKET OB/XF VALUE		3,400
TOTAL LAND VALUE - MARKET		55,000
TOTAL MARKET VALUE		354,116
SOH/AGL Deduction		146,238
ASSESSED VALUE		207,878
TOTAL EXEMPTION VALUE	HX HB WX	55,722
BASE TAXABLE VALUE		152,156
TOTAL JUST VALUE		354,116
NCON VALUE		0
INCOME VALUE		
PREVIOUS YEAR MKT VALUE		354,116

LAND:1:1: 4.65 AC

PERMIT NUM	DESCRIPTION	AMT	ISSUED

SALES DATA

OFF RECORD Number	DATE	TYPE INST	Q U /	V I /	RSN CD	SALE PRICE

BUILDING NOTES

BUILDING DIMENSIONS

BAS= W17 S4 FSP= W60 S13 E60N13$ S13 W60 S17 FGR= S22 E25N22 W25$ E25 S16 E10 FOP= E8 N4 W8 S4$ N4 E8 S4 E34 N50$ PTR= N30 HGR= N40 W42 S40 E42$ S30$.

EXTRA FEATURES

LN	OB/XF CODE	DESCRIPTION	BLD	CAP	L	W	UNITS	UT	Adj R	ADJ UNIT PRICE	ORIG COND	YEAR ON	YEAR ACTUAL	Q	% COND	OB/XF MKT VALUE	NOTES
1	0166	CONC,PAVMT	0	100	0	0	1.00	UT	0.00	0.00	100	0	0	3	100	200	
2	0190	FPLC PF	0	100	0	0	1.00	UT	1,200.00	1,200.00	100	0	0	3	100	1,200	
3	0020	BARN,FR	0	100	14	35	1.00	UT	0.00	0.00	100	0	0	3	100	1,500	
4	0260	PAVEMENT-A	0	0	0	0	1.00	UT	0.00	0.00	100	0	0	3	100	500	

LAND DESCRIPTION

TOTAL OB/XF 3,400

LN	USE CODE	CLS	LAND USE DESCRIPTION	CAP	RD	LOC ZONE	FRONT	DEPTH	TOT LND UTS	UNIT TYPE	DT	DPTH FACT	% COND	TOT ADJ	UNIT PRICE	ADJ UNIT PRICE	LAND VALUE	OTHER ADJUSTMENTS AND NOTES	YEAR	DENSITY	DECL	FRZ	YR	CONSRV
1	0100	C	SFR	100		RSF-1	0.00	0.00	1.00	LT		1.00	1.00	1.00	55,000.00	55,000.00	55,000							

REVIEW DATE 08/17/2017 BY BC Total Acres: 4.65 Total Land Value: 55,000 Market: 0 Agricultural: 0 Common: 55,000 PRINTED 11/19/2025 BY SYS