COMM SW COR OF NW1/4, RUN N 40 F
C-133-B, RUN E ALONG R/W 27.85 F
CONT E 340.72 FT, N 749.2 FT, W

BOOTH SHELLY
284 SE MCNAIR CT
LAKE CITY, FL 32025

2026

22-4S-17-08700-001

COLUMBIA COUNTY PROPERTY

BUILDING CHARACTERISTICS

ELEMENT	CD	CONSTRUCTION
Exterior Wall	31	VINYL SID 100
Roof Structur	03	GABLE/HIP 100
Roof Cover	12	MODULAR MT 100
Interior Wall	05	DRYWALL 100
Interior Floo	14	CARPET 50
Interior Floo	15	HARDTILE 50
Air Condition	03	CENTRAL 100
Heating Type	04	AIR DUCTED 100
Bedrooms		3 100
Bathrooms		2.5 100
Frame	01	NONE 100
Stories	2.	2. 100
Architectual	05	CONV 100
Units		0 100
Condition Adj	03	03 100
Kitchen Adjus	01	01 100
Quality	05	05
DOR CODE	5000	IMPROVED AG
MAP NUM		MKT AREA 02
NEIGHBORHOOD/LOC	22417.00	1.00/

AREA TYPE	TOTAL GROSS AREA	PCT OF BASE	YEAR	TOT ADJ AREA	SUBAREA MARKET VALUE
BAS	484	100		484	38,838
BAS	1,000	100		1,000	80,243
FOP	105	30		32	2,568
FSP	168	40		67	5,376
FUS	895	100		895	71,817
SFB	1,500	80		1,200	96,291
UOP	240	20		48	3,852
TOTALS	4,392			3,726	298,984

MARKET ADJUSTMENTS

TYPE	MDL	EFF. AREA	TOT ADJ PTS	EFF. BASE RATE	REPL. COST NEW	AYB	EYB	ECON	FNCT		NORM	% COND
0100	01	3,726	110.2238	123.45	459,975	1988	1988	0	0	0	35.00	65.00

1 SINGLE FAM 100% - 2024 Heated Area: 3879 HX Base Yr 2024

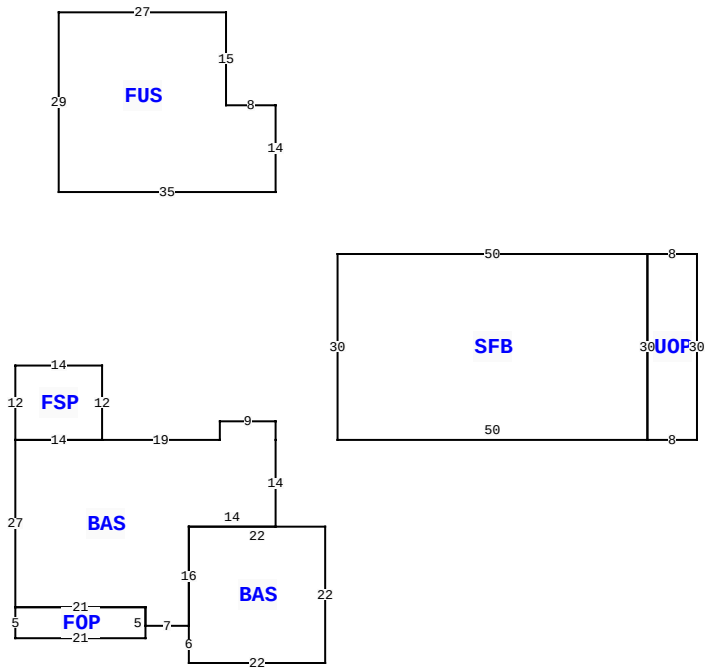

284 SE MCNAIR CT, LAKE CITY

BLD DATE		LGL DATE	
XF DATE		LAND DATE	04/07/2025 MLU
INC DATE		AG DATE	

VALUATION SUMMARY

VALUATION BY		STANDARD
Tax Group: 3	Tax Dist:	
BUILDING MARKET VALUE		298,984
TOTAL MARKET OB/XF VALUE		4,580
TOTAL LAND VALUE - MARKET		90,250
TOTAL MARKET VALUE		315,452
SOH/AGL Deduction		1,604
ASSESSED VALUE		313,848
TOTAL EXEMPTION VALUE	HX HB WX	55,722
BASE TAXABLE VALUE		258,126
TOTAL JUST VALUE		393,814
NCON VALUE		0
INCOME VALUE		
PREVIOUS YEAR MKT VALUE		393,814

SALE:1:1: 10 ACRES WITH HOUSE

PERMIT NUM	DESCRIPTION	AMT	ISSUED
000043289	Roof Replacement	13,702	12/01/2021

SALES DATA

OFF RECORD Number	DATE	TYPE INST	Q U /	V I /	RSN CD	SALE PRICE
1491/1724	5/12/2023	QC	U	I	11	100
GRANTOR: DENOFF DONALD W						
GRANTEE: BOOTH SHELLY						
1323/1046	9/01/2016	WD	Q	I	01	238,000
GRANTOR: MARIANNE MULLEN (SING						
GRANTEE: DONALD W DENOFF (A						

BUILDING NOTES

BUILDING DIMENSIONS

BAS= N3 W9 S3 W19 FSP= N12 W14 S12 E14$ W14 S27 FOP= S5 E21 N5 W21$ E21 S3 E7 BAS= S6E22 N22 W22 S16$ N16 E14 N14$ PTR=N40 FUS= N14 W8 N15 W27 S29 E35$ S40$ PTR=E60 UOP= E8N30 W8 SFB= W50 S30 E50 N30$ S30$ W60$.

EXTRA FEATURES

L N	OB/XF CODE	DESCRIPTION	BLD	CAP	L	W	UNITS	UT	Adj R	ADJ UNIT PRICE	ORIG COND	YEAR ON	YEAR ACTUAL	Q	% COND	OB/XF MKT VALUE	NOTES
1	0166	CONC,PAVMT	0	100	0	0	1.00	UT	0.00	0.00	100	0	0	3	100	200	
2	0190	FPLC PF	0	100	0	0	1.00	UT	1,200.00	1,200.00	100	0	0	3	100	1,200	
3	0260	PAVEMENT-A	0	100	0	0	1.00	UT	0.00	0.00	100	0	0	3	100	2,000	
4	0294	SHED WOOD/	0	100	9	16	144.00	UT	7.50	7.50	100	1993	1993	3	100	1,080	
5	0120	CLFENCE 4	0	100	0	0	1.00	UT	0.00	0.00	100	1993	1993	3	100	100	

LAND DESCRIPTION

TOTAL OB/XF 4,580

L N	USE CODE	CLS	LAND USE DESCRIPTION	CAP	R D	LOC ZONE	FRONT	DEPTH	TOT LND UTS	UNIT TYPE	D T	DPTH FACT	% COND	TOT ADJ	UNIT PRICE	ADJ UNIT PRICE	LAND VALUE	OTHER ADJUSTMENTS AND NOTES	YEAR	DENSITY	DECL	FRZ	YR	CONSRV
1	0100	C	SFR	100		A-1	0.00	0.00	1.00	AC		1.00	1.00	1.00	9,500.00	9,500.00	9,500							
2	5600	A	TIMBER 3	100					8.50	AC		1.00	1.00	1.00	281.00	281.00	2,388							
3	9910	M	MKT.VAL.AG	100					8.50	AC		1.00	1.00	1.00	9,500.00	9,500.00	80,750							

REVIEW DATE 05/22/2017 BY BC Total Acres: 9.50 Total Land Value: 11,888 Market: 80,750 Agricultural: 2,388 Common: 9,500 PRINTED 11/17/2025 BY SYS