COMM SW COR OF NE 1/4 OF SW1/4 R
E 266 FT, N 127.48 FT FOR POB, C
E 291.44 FT, S 300 FT, W 290.46

WEIRSKY ROXANN
4491 SE COUNTRY CLUB RD
LAKE CITY, FL 32025

2026

22-4S-17-08680-003

COLUMBIA COUNTY PROPERTY

BUILDING CHARACTERISTICS

ELEMENT	CD	CONSTRUCTION
Exterior Wall	32	HARDIE BRD 100
Roof Structur	03	GABLE/HIP 100
Roof Cover	03	COMP SHNGL 100
Interior Wall	05	DRYWALL 100
Interior Floo	12	HARDWOOD 80
Interior Floo	15	HARDTILE 20
Air Condition	03	CENTRAL 100
Heating Type	04	AIR DUCTED 100
Bedrooms		3 100
Bathrooms		2 100
Frame	02	WOOD FRAME 100
Stories	1.	1. 100
Architectual	05	CONV 100
Units		0 100
Condition Adj	03	03 100
Kitchen Adjus	01	01 100
Quality	07	07

DOR CODE	0100	SINGLE FAMILY	
MAP NUM		MKT AREA	02
NEIGHBORHOOD/LOC	22417.00	1.00/	

AREA TYPE	TOTAL GROSS AREA	PCT OF BASE	YEAR	TOT ADJ AREA	SUBAREA MARKET VALUE
BAS	2,607	100		2,607	283,633
FGR	576	55		317	34,488
FOP	216	30		65	7,072
FSP	333	40		133	14,470
SFB	288	80		230	25,023
TOTALS	4,020			3,352	364,685

MARKET ADJUSTMENTS

TYPE	MDL	EFF. AREA	TOT ADJ PTS	EFF. BASE RATE	REPL. COST NEW	AYB	EYB	ECON	FNCT		NORM	% COND
0100	01	3,352	117.0400	131.08	439,380	2008	2008	0	0	0	17.00	83.00

1 SINGLE FAM 100% - 2015 Heated Area: 2895 HX Base Yr 2015

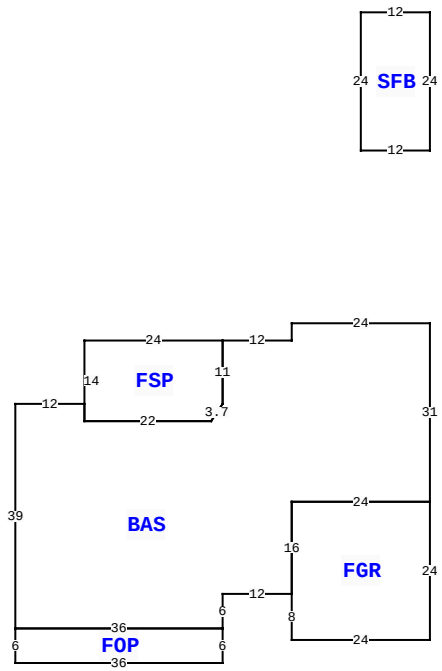

4491 SE COUNTRY CLUB RD, LAKE CITY

BLD DATE		LGL DATE	
XF DATE		LAND DATE	04/07/2025 MLU
INC DATE		AG DATE	

VALUATION SUMMARY

VALUATION BY		STANDARD
Tax Group: 3	Tax Dist:	
BUILDING MARKET VALUE		364,685
TOTAL MARKET OB/XF VALUE		4,232
TOTAL LAND VALUE - MARKET		22,400
TOTAL MARKET VALUE		391,317
SOH/AGL Deduction		131,733
ASSESSED VALUE		259,584
TOTAL EXEMPTION VALUE	HX HB WX	55,722
BASE TAXABLE VALUE		203,862
TOTAL JUST VALUE		391,317
NCON VALUE		0
INCOME VALUE		
PREVIOUS YEAR MKT VALUE		395,711

PERMIT NUM	DESCRIPTION	AMT	ISSUED
26316	SFR	731	10/08/2007

SALES DATA

OFF RECORD Number	DATE	TYPE INST	Q U	V I	RSN CD	SALE PRICE
1280/1623	8/27/2014	WD	U	I	38	225,000
GRANTOR: MITCHELL & SHELLI SHO						
GRANTEE: DAVID W & ROXANN WE						
1127/0887	8/03/2007	WD	U	V		100
GRANTOR: RONALD & KAY JONES						
GRANTEE: MITCHELL & SHELLI S						

BUILDING NOTES

BUILDING DIMENSIONS

BAS= W24 S3 W12 FSP= W24 S14 E22 R2 U3 N11$ S11 D3 L2 W22 N3 W12 S39 FOP= S6 E36 N6 W36$ E36 N6 E12 FGR= S8 E24 N24 W24 S16$ N16 E24 N31$ PTR= N30 SFB= N24 W12 S24 E12$ S30$.

EXTRA FEATURES

LN	OB/XF CODE	DESCRIPTION	BLD	CAP	L	W	UNITS	UT	Adj R	ADJ UNIT PRICE	ORIG COND	YEAR ON	YEAR ACTUAL	Q	% COND	OB/XF MKT VALUE	NOTES
1	0166	CONC,PAVMT	0	100	0	0	2,351.00	UT	1.80	1.80	100	2008	2008	3	100	4,232	

LAND DESCRIPTION

TOTAL OB/XF 4,232

LN	USE CODE	CLS	LAND USE DESCRIPTION	CAP	RD	LOC ZONE	FRONT	DEPTH	TOT LND UTS	UNIT TYPE	DT	DPTH FACT	% COND	TOT ADJ	UNIT PRICE	ADJ UNIT PRICE	LAND VALUE	OTHER ADJUSTMENTS AND NOTES	YEAR	DENSITY	DECL	FRZ	YR	CONSRV
1	0100	C	SFR	100		A-1	0.00	0.00	2.00	AC		1.00	1.00	0.80	14,000.00	11,200.00	22,400							

REVIEW DATE 05/26/2017 BY BC Total Acres: 2.00 Total Land Value: 22,400 Market: 0 Agricultural: 0 Common: 22,400 PRINTED 11/18/2025 BY SYS