COMM AT SE COR OF LOT 19, BLAINE
RUN E ALONG N R/W OF C R 242 185
N 131.53 FT, NE ALONG CURVE APPR

CARUSO MICHAEL/CARUSO PATRICIA
277 SW CELINE CT
LAKE CITY, FL 32024

2026

22-4S-16-03090-003

COLUMBIA COUNTY PROPERTY

BUILDING CHARACTERISTICS

ELEMENT	CD	CONSTRUCTION
Exterior Wall	31	VINYL SID 100
Roof Structur	03	GABLE/HIP 100
Roof Cover	03	COMP SHNGL 100
Interior Wall	05	DRYWALL 100
Interior Floo	14	CARPET 80
Interior Floo	08	SHT VINYL 20
Air Condition	03	CENTRAL 100
Heating Type	04	AIR DUCTED 100
Bedrooms		3 100
Bathrooms		2 100
Frame	01	NONE 100
Stories	1.	1. 100
Architectual	05	CONV 100
Units		0 100
Condition Adj	03	03 100
Kitchen Adjus	01	01 100
Quality	05	05
DOR CODE	0201	MODULAR HOME
MAP NUM		MKT AREA 06
NEIGHBORHOOD/LOC	22416.00	1.00/

AREA TYPE	TOTAL GROSS AREA	PCT OF BASE	YEAR	TOT ADJ AREA	SUBAREA MARKET VALUE
BAS	588	100		588	31,492
BAS	1,856	100		1,856	99,405
FGR	704	55		387	20,727
FSP	192	40		77	4,124
UDU	288	55		158	8,462
TOTALS	3,628			3,066	164,212

MARKET ADJUSTMENTS

TYPE	MDL	EFF. AREA	TOT ADJ PTS	EFF. BASE RATE	REPL. COST NEW	AYB	EYB	ECON	FNCT		NORM	% COND
0201	01	3,066	103.6000	97.38	298,567	2004	2004	0	0	0	45.00	55.00

1 MANUF 1 100% - 2005 Heated Area: 2444 HX Base Yr 2005

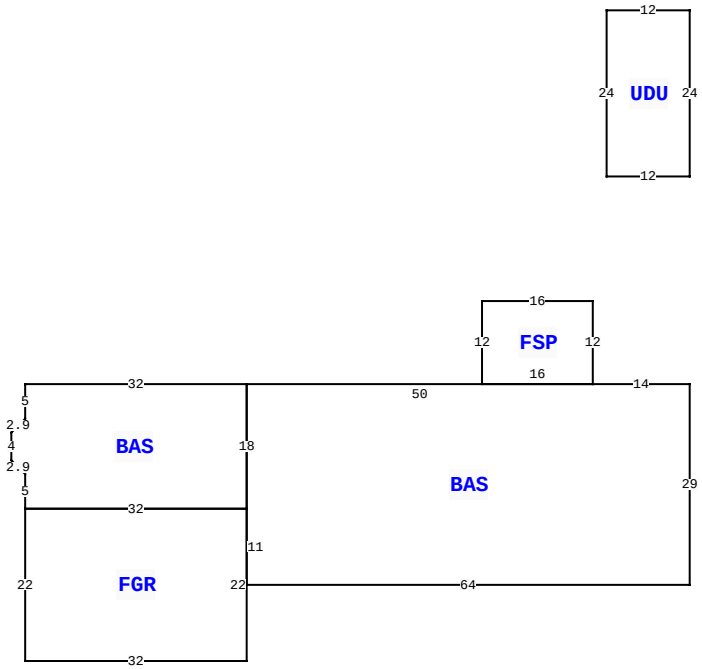

277 SW CELINE CT, LAKE CITY

BLD DATE		LGL DATE	
XF DATE		LAND DATE	04/03/2025 MLU
INC DATE		AG DATE	

VALUATION SUMMARY

VALUATION BY		STANDARD
Tax Group: 3	Tax Dist:	
BUILDING MARKET VALUE		164,212
TOTAL MARKET OB/XF VALUE		2,000
TOTAL LAND VALUE - MARKET		35,000
TOTAL MARKET VALUE		201,212
SOH/AGL Deduction		95,580
ASSESSED VALUE		105,632
TOTAL EXEMPTION VALUE	HX HB DX	55,722
BASE TAXABLE VALUE		49,910
TOTAL JUST VALUE		201,212
NCON VALUE		0
INCOME VALUE		
PREVIOUS YEAR MKT VALUE		201,212

PERMIT NUM	DESCRIPTION	AMT	ISSUED
000046069	Roof Replacement	21,408	12/09/2022
24350	SFR	278	04/06/2006
21322	ADDN SFR	250	12/08/2003

SALES DATA

OFF RECORD Number	DATE	TYPE INST	Q U	V I	RSN CD	SALE PRICE
1029/1108	10/22/2004	QC	Q	I	01	100
GRANTOR: JOSEPHINE KUIKEN						
GRANTEE: JOSEPHINE KUIKEN, M						
1001/0874	12/04/2003	WD	Q	V		18,500
GRANTOR: DANIEL CRAPPS & JAMES						
GRANTEE: JOSEPHINE KUIKEN						

BUILDING NOTES

BUILDING DIMENSIONS

BAS= W14 FSP= N12 W16 S12 E16$ W50 BAS= W32 S5 D2 L2 S4 R2 D2 S5 E32 N18$ S18 FGR= W32 S22 E32 N22$ S11 E64 N29$ PTR= N30 UDU= N24 W12 S24 E12$ S30$.

EXTRA FEATURES

LN	OB/XF CODE	DESCRIPTION	BLD	CAP	L	W	UNITS	UT	Adj R	ADJ UNIT PRICE	ORIG COND	YEAR ON	YEAR ACTUAL	Q	% COND	OB/XF MKT VALUE	NOTES
1	0190	FPLC PF	0	100	0	0	1.00	UT	1,200.00	1,200.00	100	2004	2004	3	100	1,200	
2	0166	CONC,PAVMT	0	100	0	0	1.00	UT	0.00	0.00	100	2014	2014	3	100	200	
3	0120	CLFENCE 4	0	100	0	0	1.00	UT	0.00	0.00	100	2014	2014	3	100	200	
4	0262	PRCH,FOP	0	100	0	0	1.00	UT	0.00	0.00	100	2014	2014	3	100	400	

LAND DESCRIPTION

TOTAL OB/XF 2,000

LN	USE CODE	CLS	LAND USE DESCRIPTION	CAP	RD	LOC ZONE	FRONT	DEPTH	TOT LND UTS	UNIT TYPE	DT	DPTH FACT	% COND	TOT ADJ	UNIT PRICE	ADJ UNIT PRICE	LAND VALUE	OTHER ADJUSTMENTS AND NOTES	YEAR	DENSITY	DECL	FRZ	YR	CONSRV
1	0100	C	SFR	100			0.00	0.00	1.00	LT		1.00	1.00	1.00	35,000.00	35,000.00	35,000							

REVIEW DATE 04/04/2025 BY KS Total Acres: 1.13 Total Land Value: 35,000 Market: 0 Agricultural: 0 Common: 35,000 PRINTED 11/19/2025 BY SYS