LOT 18 FOREST COUNTRY 6TH ADDITI
WD 1252-1061, DC 1526-1846,

ROPER PATRICIA H
588 SW PINEHURST DR
LAKE CITY, FL 32024-1294

2026

22-4S-16-03087-118

COLUMBIA COUNTY PROPERTY

BUILDING CHARACTERISTICS

ELEMENT	CD	CONSTRUCTION
Exterior Wall	19	COMMON BRK 100
Roof Structur	03	GABLE/HIP 100
Roof Cover	03	COMP SHNGL 100
Interior Wall	05	DRYWALL 100
Interior Floo	12	HARDWOOD 80
Interior Floo	15	HARDTILE 20
Air Condition	03	CENTRAL 100
Heating Type	04	AIR DUCTED 100
Bedrooms		3 100
Bathrooms		2 100
Frame	02	WOOD FRAME 100
Stories	1.	1. 100
Architectual	05	CONV 100
Units		0 100
Quality	06	06

DOR CODE 0100 SINGLE FAMILY
MAP NUM | MKT AREA 06
NEIGHBORHOOD/LOC 22416.040 1.00/

AREA TYPE	TOTAL GROSS AREA	PCT OF BASE	YEAR	TOT ADJ AREA	SUBAREA MARKET VALUE
BAS	2,711	100		2,711	312,698
FGR	657	55		361	41,640
FOP	96	30		29	3,345
FOP	358	30		107	12,342
UDG	609	55		335	38,640
UOP	222	20		44	5,075
TOTALS	4,653			3,587	413,739

MARKET ADJUSTMENTS

TYPE	MDL	EFF. AREA	TOT ADJ PTS	EFF. BASE RATE	REPL. COST NEW	AYB	EYB	ECON	FNCT		NORM	% COND
0100	01	3,587	115.7100	129.60	464,875	2014	2014	0	0	0	11.00	89.00

1 SINGLE FAM 100% - 2015 Heated Area: 2711 HX Base Yr 2015

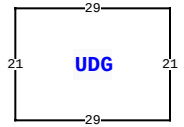

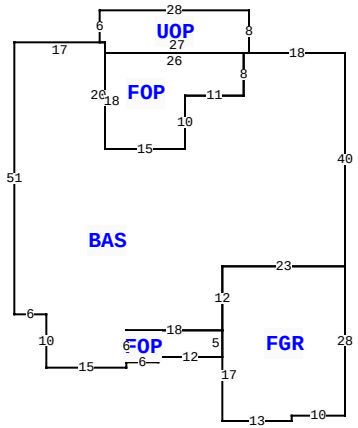

588 SW PINEHURST DR, LAKE CITY

BLD DATE		LGL DATE	
XF DATE		LAND DATE	
INC DATE		AG DATE	

VALUATION SUMMARY

VALUATION BY		STANDARD
Tax Group: 3	Tax Dist:	
BUILDING MARKET VALUE		413,739
TOTAL MARKET OB/XF VALUE		11,554
TOTAL LAND VALUE - MARKET		26,500
TOTAL MARKET VALUE		451,793
SOH/AGL Deduction		136,223
ASSESSED VALUE		315,570
TOTAL EXEMPTION VALUE	HX HB	50,722
BASE TAXABLE VALUE		264,848
TOTAL JUST VALUE		451,793
NCON VALUE		0
INCOME VALUE		
PREVIOUS YEAR MKT VALUE		456,742

PERMIT NUM	DESCRIPTION	AMT	ISSUED
31497	SFR	1,057	10/07/2013

SALES DATA

OFF RECORD Number	DATE	TYPE INST	Q U /	V I /	RSN CD	SALE PRICE
1252/1061	4/04/2013	WD	Q	V	01	37,500

GRANTOR: ALEX H STEVENS JR & E
GRANTEE: MICHAEL A & PATRICI

BUILDING NOTES

BUILDING DIMENSIONS

BAS= W17 S51 E6 S10 E15 N1 FOP= E6 N1 E12 N5 W18 S6$ N6 E18 FGR= S17 E13 N1 E10 N28 W23 S12$ N12 E23 N40 W18 UOP= N8 W28 S6 E1 S2 E27$ W1FOP= W26 S18 E15 N10 E11 N8$ S8 W11 S10 W15 N20$ PTR= N30 UDG= N21 W29 S21 E29$ S30$.

EXTRA FEATURES

LN	OB/XF CODE	DESCRIPTION	BLD	CAP	L	W	UNITS	UT	Adj R	ADJ UNIT PRICE	ORIG COND	YEAR ON	YEAR ACTUAL	Q	% COND	OB/XF MKT VALUE	NOTES
1	0190	FPLC PF	0	100	0	0	1.00	UT	1,200.00	1,200.00	100	2014	2014	3	100	1,200	
2	0166	CONC,PAVMT	0	100	0	0	2,477.00	UT	2.00	2.00	100	2014	2014	3	100	4,954	
3	0104	GENERATOR	0	100	0	0	1.00	UT	6,000.00	6,000.00	100	2025	2024		90	5,400	

LAND DESCRIPTION

TOTAL OB/XF 11,554

LN	USE CODE	CLS	LAND USE DESCRIPTION	CAP	RD	LOC ZONE	FRONT	DEPTH	TOT LND UTS	UNIT TYPE	DT	DPTH FACT	% COND	TOT ADJ	UNIT PRICE	ADJ UNIT PRICE	LAND VALUE	OTHER ADJUSTMENTS AND NOTES	YEAR	DENSITY	DECL	FRZ	YR	CONSRV
1	0100	C	SFR	100		RSF-2	0.00	0.00	1.00	LT		1.00	1.00	1.00	26,500.00	26,500.00	26,500							

REVIEW DATE 04/04/2025 BY KS Total Acres: 0.73 Total Land Value: 26,500 Market: 0 Agricultural: 0 Common: 26,500 PRINTED 11/18/2025 BY SYS