COMM SE COR OF SE1/4 OF NE1/4, R
N 416.03 FT FOR POB, CONT N 416.
S 416.03 FT, W 262 FT TO POB. A

LADNER POLLY ANN
683 SW STEEDLEY DR
LAKE CITY, FL 32024-9815

2026

22-4S-16-03086-009

COLUMBIA COUNTY PROPERTY

BUILDING CHARACTERISTICS

ELEMENT	CD	CONSTRUCTION
Exterior Wall	32	HARDIE BRD 100
Roof Structur	03	GABLE/HIP 100
Roof Cover	12	MODULAR MT 100
Interior Wall	05	DRYWALL 100
Interior Floo	14	CARPET 90
Interior Floo	06	VINYL ASB 10
Air Condition	03	CENTRAL 100
Heating Type	04	AIR DUCTED 100
Bedrooms		3 100
Bathrooms		2 100
Frame	01	NONE 100
Stories	1.	1. 100
Architectual	05	CONV 100
Units		0 100
Condition Adj	03	03 100
Kitchen Adjus	01	01 100
Quality	05	05
DOR CODE	0100	SINGLE FAMILY
MAP NUM		MKT AREA 06
NEIGHBORHOOD/LOC	22416.00	1.00/

AREA TYPE	TOTAL GROSS AREA	PCT OF BASE	YEAR	TOT ADJ AREA	SUBAREA MARKET VALUE
BAS	1,404	100		1,404	115,508
FDG	576	60		346	28,465
PTO	196	5		10	823
UDG	480	55		264	21,719
UGR	484	45		218	17,935
UOP	400	20		80	6,582
TOTALS	3,540			2,322	191,032

MARKET ADJUSTMENTS

TYPE	MDL	EFF. AREA	TOT ADJ PTS	EFF. BASE RATE	REPL. COST NEW	AYB	EYB	ECON	FNCT		NORM	% COND
0100	01	2,322	113.0050	126.57	293,896	1987	1987	0	0	0	35.00	65.00

1 SINGLE FAM 50% - 2000 Heated Area: 1404 HX Base Yr

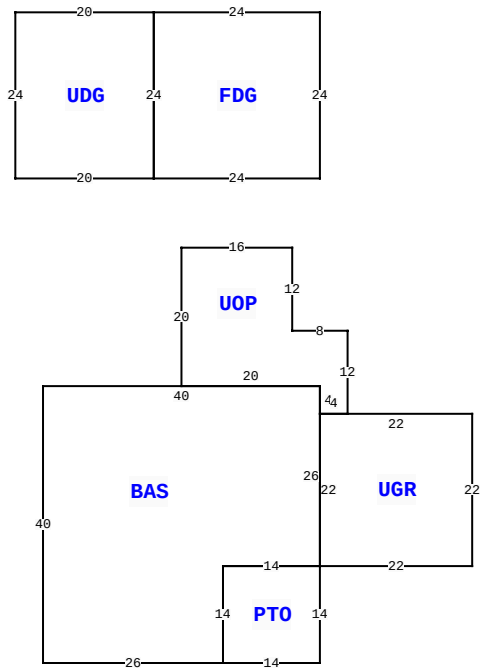

683 SW STEEDLEY DR, LAKE CITY

BLD DATE		LGL DATE	
XF DATE		LAND DATE	
INC DATE		AG DATE	

VALUATION SUMMARY

VALUATION BY		STANDARD
Tax Group: 3	Tax Dist:	
BUILDING MARKET VALUE		191,032
TOTAL MARKET OB/XF VALUE		9,900
TOTAL LAND VALUE - MARKET		20,000
TOTAL MARKET VALUE		220,932
SOH/AGL Deduction		77,608
ASSESSED VALUE		143,324
TOTAL EXEMPTION VALUE	HA HAB	46,315
BASE TAXABLE VALUE		97,009
TOTAL JUST VALUE		220,932
NCON VALUE		0
INCOME VALUE		
PREVIOUS YEAR MKT VALUE		220,932

PERMIT NUM	DESCRIPTION	AMT	ISSUED
000049094	Roof Replacement	5,700	01/26/2024
13584	GARAGE	60	02/03/1997

SALES DATA

OFF RECORD Number	DATE	TYPE INST	Q U	V I	RSN CD	SALE PRICE
1538/960	2/11/2025	QC	U	I	11	100
GRANTOR: MURRAY DANNY HAVEN						
GRANTEE: MURRAY POLLY ANN						
0519/0587	9/01/1983	AA	Q	V		12,500
GRANTOR:						
GRANTEE:						

BUILDING NOTES

BUILDING DIMENSIONS

BAS= W40 S40 E26 PTO= E14 N14 W14 S14$ N14 E14 UGR= E22N22 W22 S22$ N26$ UOP= S4 E4 N12 W8 N12 W16 S20 E20$ PTR= N30 FDG= N24 W24 UDG= W20 S24 E20 N24$ S24 E24$ S30$.

EXTRA FEATURES

LN	OB/XF CODE	DESCRIPTION	BLD	CAP	L	W	UNITS	UT	Adj R	ADJ UNIT PRICE	ORIG COND	YEAR ON	YEAR ACTUAL	Q	% COND	OB/XF MKT VALUE	NOTES
1	0166	CONC,PAVMT	0	50	0	0	1.00	UT	0.00	0.00	100	0	0	3	100	200	
2	0070	CARPORT UF	0	50	0	0	1.00	UT	0.00	0.00	100	2019	2019	3	100	700	
3	0296	SHED METAL	0	50	0	0	1.00	UT	0.00	0.00	100	2019	2019	3	100	1,000	
4	0030	BARN,MT	0	100	0	0	1.00	UT	8,000.00	8,000.00	100	2025	2024		100	8,000	

LAND DESCRIPTION

TOTAL OB/XF 9,900

LN	USE CODE	CLS	LAND USE DESCRIPTION	CAP	RD	LOC ZONE	FRONT	DEPTH	TOT LND UTS	UNIT TYPE	DT	DPTH FACT	% COND	TOT ADJ	UNIT PRICE	ADJ UNIT PRICE	LAND VALUE	OTHER ADJUSTMENTS AND NOTES	YEAR	DENSITY	DECL	FRZ	YR	CONSRV
1	0100	C	SFR	50		A-1	0.00	0.00	2.50	AC		1.00	1.00	1.00	8,000.00	8,000.00	20,000							

REVIEW DATE 04/04/2025 BY KS Total Acres: 2.50 Total Land Value: 20,000 Market: 0 Agricultural: 0 Common: 20,000 PRINTED 09/30/2025 BY SYS