LOT 28 WOODBOROUGH PHASE 1.

ORB 644-236, 745-688, 805-2331,

COCHRAN GARY JR/COCHRAN MICHELLE
1080 NW SCENIC LAKE DR
LAKE CITY, FL 32055-8592

2026

22-3S-16-02268-228

COLUMBIA COUNTY PROPERTY

BUILDING CHARACTERISTICS

ELEMENT	CD	CONSTRUCTION
Exterior Wall	16	WD FR STUC 100
Roof Structur	08	IRREGULAR 100
Roof Cover	03	COMP SHNGL 100
Interior Wall	05	DRYWALL 100
Interior Floo	14	CARPET 90
Interior Floo	11	CLAY TILE 10
Air Condition	03	CENTRAL 100
Heating Type	04	AIR DUCTED 100
Bedrooms		4 100
Bathrooms		3.5 100
Frame	01	NONE 100
Stories	1.5	1.5 100
Architectual	05	CONV 100
Units		0 100
Condition Adj	03	03 100
Kitchen Adjus	01	01 100
Quality	08	08
DOR CODE	0100	SINGLE FAMILY
MAP NUM		MKT AREA 06
NEIGHBORHOOD/LOC	22316.010	1.00/

AREA TYPE	TOTAL GROSS AREA	PCT OF BASE	YEAR	TOT ADJ AREA	SUBAREA MARKET VALUE
BAS	3,273	100		3,273	329,670
FGR	572	55		315	31,728
FHS	195	60		117	11,785
FOP	28	30		8	806
FOP	63	30		19	1,914
FSP	77	40		31	3,123
FSP	435	40		174	17,526
TOTALS	4,643			3,937	396,551

MARKET ADJUSTMENTS

TYPE	MDL	EFF. AREA	TOT ADJ PTS	EFF. BASE RATE	REPL. COST NEW	AYB	EYB	ECON	FNCT		NORM	% COND
0100	01	3,937	138.3530	154.96	610,078	1991	2000	0	0	0	35.00	65.00

1 SINGLE FAM 100% - 2016 Heated Area: 3468 HX Base Yr 2016

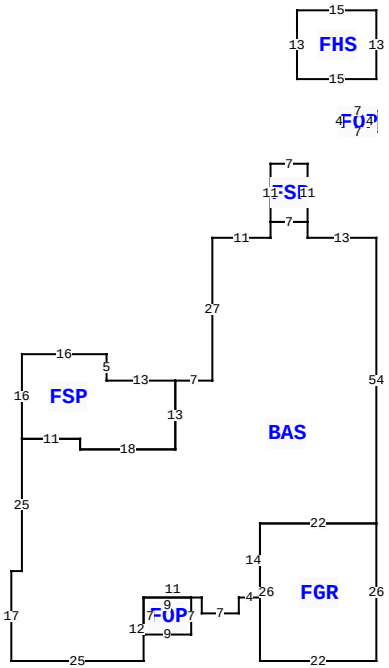

1080 NW SCENIC LAKE DR, LAKE CITY

BLD DATE		LGL DATE	
XF DATE		LAND DATE	
INC DATE		AG DATE	

VALUATION SUMMARY

VALUATION BY		STANDARD
Tax Group: 2	Tax Dist:	
BUILDING MARKET VALUE		396,551
TOTAL MARKET OB/XF VALUE		37,453
TOTAL LAND VALUE - MARKET		99,000
TOTAL MARKET VALUE		533,004
SOH/AGL Deduction		118,743
ASSESSED VALUE		414,261
TOTAL EXEMPTION VALUE	HX HB	50,722
BASE TAXABLE VALUE		363,539
TOTAL JUST VALUE		533,004
NCON VALUE		0
INCOME VALUE		
PREVIOUS YEAR MKT VALUE		533,004

PERMIT NUM	DESCRIPTION	AMT	ISSUED

SALES DATA

OFF RECORD Number	DATE	TYPE INST	Q U	V I	RSN CD	SALE PRICE
1295/2590	6/05/2015	WD	Q	I	01	425,000
GRANTOR: THOMAS H & PAULA M MI						
GRANTEE: GARY JR & MICHELLE						
1241/0972	9/07/2012	WD	Q	I	01	425,000
GRANTOR: JOHN G & PATTY C WILS						
GRANTEE: THOMAS H & PAULA M						

BUILDING NOTES

BUILDING DIMENSIONS

BAS= W13 N3 FSP= N11 W7 S11 E7$ W7 S3 W11 S27 W7 FSP= W13 N5 W16 S16 E11 S2 E18 N13$ S13 W18 N2 W11 S25W2 S17 E25 N12 FOP= S7 E9 N7 W9$ E11 S3 E7 N3 E4 N14 E22 FGR= S26 W22 N26 E22$ N54$ PTR=N30 FHS= N13 W15 S13 E15$ S30$ PTR= N20 FOP= N4 W7 S4 E7$ S20$.

EXTRA FEATURES

LN	OB/XF CODE	DESCRIPTION	BLD	CAP	L	W	UNITS	UT	Adj R	ADJ UNIT PRICE	ORIG COND	YEAR ON	YEAR ACTUAL	Q	% COND	OB/XF MKT VALUE	NOTES
1	0220	JACUZZI	0	100	0	0	1.00	UT	0.00	0.00	100	0	0	3	100	2,500	
2	0190	FPLC PF	0	100	0	0	1.00	UT	1,200.00	1,200.00	100	0	0	3	100	1,200	
3	0280	POOL R/CON	0	100	32	16	512.00	UT	70.00	70.00	100	1992	1992	3	40	14,336	
4	0166	CONC,PAVMT	0	100	0	0	2,800.00	UT	2.00	2.00	100	0	0	3	100	5,600	
5	0282	POOL ENCL	0	100	0	0	1,000.00	UT	15.00	15.00	100	1992	1992	3	40	6,000	
6	0296	SHED METAL	0	100	12	24	1.00	UT	0.00	0.00	100	2008	2008	3	100	2,000	
7	0083	DOCK-LAKE	0	100	0	0	1,100.00	UT	11.50	11.50	100	2014	2014	3	40	5,060	
8	0080	DECKING	0	100	0	0	150.00	UT	5.00	5.00	100	2014	2014	3	100	750	
9	0083	DOCK-LAKE	0	100	0	0	1.00	UT	11.50	11.50	100	2018	2018	3	58	7	

LAND DESCRIPTION

TOTAL OB/XF 37,453

LN	USE CODE	CLS	LAND USE DESCRIPTION	CAP	RD	LOC ZONE	FRONT	DEPTH	TOT LND UTS	UNIT TYPE	DT	DPTH FACT	% COND	TOT ADJ	UNIT PRICE	ADJ UNIT PRICE	LAND VALUE	OTHER ADJUSTMENTS AND NOTES	YEAR	DENSITY	DECL	FRZ	YR	CONSRV
1	0133	C	SFR LAKE	100		A-1	0.00	0.00	1.00	LT		1.00	1.00	1.00	99,000.00	99,000.00	99,000							

REVIEW DATE 02/20/2023 BY KS Total Acres: 2.23 Total Land Value: 99,000 Market: 0 Agricultural: 0 Common: 99,000 PRINTED 11/19/2025 BY SYS