LOT 1 COUNTRY LAKE IN WOODBOROUG
WD 1474-414,

BRYAN ZECHER HOMES, INC
2370 SW STATE ROAD 47
LAKE CITY, FL 32056

2026

22-3S-16-02267-601

BUILDING CHARACTERISTICS

ELEMENT	CD	CONSTRUCTION
Exterior Wall	32	HARDIE BRD 100
Exterior Wall	00	N/A 0
Roof Structur	08	IRREGULAR 100
Roof Cover	03	COMP SHNGL 100
Interior Wall	05	DRYWALL 100
Interior Floo	13	LAM/VNLPLK 100
Interior Floo	00	N/A 0
Air Condition	03	CENTRAL 100
Heating Type	04	AIR DUCTED 100
Bedrooms		3 100
Bathrooms		3 100
Frame	02	WOOD FRAME 100
Stories	1.	1. 100
Units		0 100
Condition Adj	03	03 100
Kitchen Adjus	01	01 100
Quality	06	06

DOR CODE	0100	SINGLE FAMILY	
MAP NUM		MKT AREA	06
NEIGHBORHOOD/LOC	22316.06	1.00/	

AREA TYPE	TOTAL GROSS AREA	PCT OF BASE	YEAR	TOT ADJ AREA	SUBAREA MARKET VALUE
BAS	2,485	100	2024	2,485	316,686
FGR	529	55	2024	291	37,085
FOP	193	30	2024	58	7,391
FOP	392	30	2024	118	15,038
TOTALS	3,599			2,952	376,200

MARKET ADJUSTMENTS

TYPE	MDL	EFF. AREA	TOT ADJ PTS	EFF. BASE RATE	REPL. COST NEW	AYB	EYB	ECON	FNCT		NORM	% COND
0100	01	2,952	116.1090	130.04	383,878	2023	2023	0	0	0	2.00	98.00

1 SINGLE FAM 0% - 2024 Heated Area: 2485 HX Base Yr

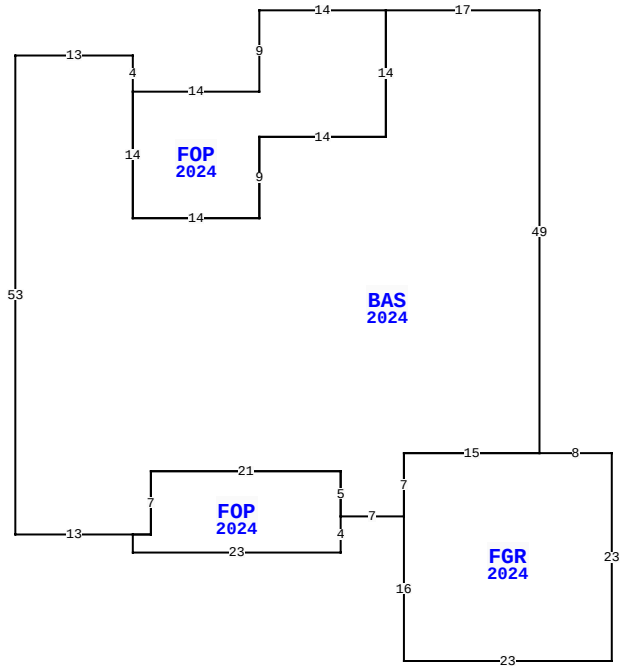

423 NW COUNTRY LAKE DR, LAKE CITY

BLD DATE		LGL DATE	
XF DATE		LAND DATE	04/03/2025 MLU
INC DATE		AG DATE	

COLUMBIA COUNTY PROPERTY

PAGE 1 of 1 2

VALUATION SUMMARY

VALUATION BY	STANDARD
Tax Group: 2	Tax Dist:
BUILDING MARKET VALUE	376,200
TOTAL MARKET OB/XF VALUE	2,430
TOTAL LAND VALUE - MARKET	35,000
TOTAL MARKET VALUE	413,630
SOH/AGL Deduction	0
ASSESSED VALUE	413,630
TOTAL EXEMPTION VALUE	0
BASE TAXABLE VALUE	413,630
TOTAL JUST VALUE	413,630
NCON VALUE	0
INCOME VALUE	
PREVIOUS YEAR MKT VALUE	417,469

PERMIT NUM	DESCRIPTION	AMT	ISSUED
000046662	New Residential C	475,000	03/07/2023

SALES DATA

OFF RECORD Number	DATE	TYPE INST	Q U	V I	RSN CD	SALE PRICE
1474/414	8/18/2022	WD	Q	V	01	39,000

GRANTOR: ROWAN RUTHIE RENE
GRANTEE: BRYAN ZECHER HOMES,

BUILDING NOTES

BUILDING DIMENSIONS

BAS=[YR=2024;ORIG=50,10] S53 E13 E2 N7 E21 S5 E7 N7 E15 N49 W17 S14 W14 S9 W14 N14 N4 W13 $
FOP=[YR=2024;ORIG=63,14] S14 E14 N9 E14 N14 W14 S9 W14 $
FOP=[YR=2024;ORIG=65,56] S7 W2 S2 E23 N4 N5 W21 $
FGR=[YR=2024;ORIG=93,54] S7 S16 E23 N23 W8 W15 $
.

EXTRA FEATURES

LN	OB/XF CODE	DESCRIPTION	BLD	CAP	L	W	UNITS	UT	Adj R	ADJ UNIT PRICE	ORIG COND	YEAR ON	YEAR ACTUAL	Q	% COND	OB/XF MKT VALUE	NOTES
1	0166	CONC,PAVMT	0	0	0	0	810.00	UT	3.00	3.00	100	2024	2023		100	2,430	

LAND DESCRIPTION

TOTAL OB/XF 2,430

LN	USE CODE	CLS	LAND USE DESCRIPTION	CAP	RD	LOC ZONE	FRONT	DEPTH	TOT LND UTS	UNIT TYPE	DT	DPTH FACT	% COND	TOT ADJ	UNIT PRICE	ADJ UNIT PRICE	LAND VALUE	OTHER ADJUSTMENTS AND NOTES	YEAR	DENSITY	DECL	FRZ	YR	CONSRV
1	0100	C	SFR	0			0.00	0.00	1.00	LT		1.00	1.00	1.00	35,000.00	35,000.00	35,000							

REVIEW DATE 12/07/2023 BY HC Total Acres: 1.10 Total Land Value: 35,000 Market: 0 Agricultural: 0 Common: 35,000 PRINTED 11/18/2025 BY SYS