LOT 40 COUNTRY LAKE IN WOODBOROU
LOT 3 COUNTRY LAKE IN WOODBOROUG

PINCHOUCK LEE S/PINCHOUCK LAUREN M
319 NW COUNTRY LAKE DR
LAKE CITY, FL 32055

2026

22-3S-16-02267-140

COLUMBIA COUNTY PROPERTY

BUILDING CHARACTERISTICS

ELEMENT	CD	CONSTRUCTION
Exterior Wall	32	HARDIE BRD 100
Roof Structur	08	IRREGULAR 100
Roof Cover	03	COMP SHNGL 100
Interior Wall	05	DRYWALL 100
Interior Floo	13	LAM/VNLPLK 100
Air Condition	03	CENTRAL 100
Heating Type	04	AIR DUCTED 100
Bedrooms		3 100
Bathrooms		3 100
Frame	02	WOOD FRAME 100
Stories	1.	1. 100
Units		0 100
Quality	07	07

DOR CODE 0100 SINGLE FAMILY
MAP NUM | MKT AREA 06
NEIGHBORHOOD/LOC 22316.030 1.00/

AREA TYPE	TOTAL GROSS AREA	PCT OF BASE	YEAR	TOT ADJ AREA	SUBAREA MARKET VALUE
BAS	2,311	100		2,311	301,629
FGR	570	55		314	40,983
FOP	240	30		72	9,397
FSP	240	40		96	12,530
TOTALS	3,361			2,793	364,540

MARKET ADJUSTMENTS

TYPE	MDL	EFF. AREA	TOT ADJ PTS	EFF. BASE RATE	REPL. COST NEW	AYB	EYB	ECON	FNCT	CV	NORM	% COND
0100	01	2,793	123.9700	138.85	387,808	2020	2020	0	0	1	5.00	94.00

1 SINGLE FAM 100% - 2021 Heated Area: 2311 HX Base Yr 2021

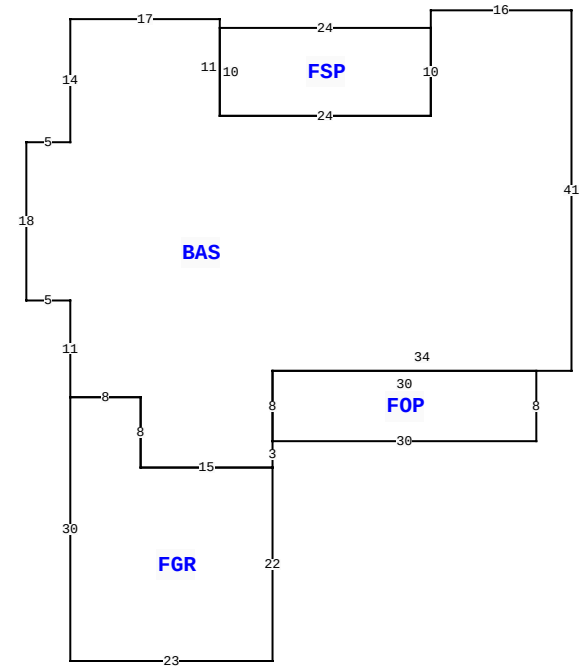

319 NW COUNTRY LAKE DR, LAKE CITY

BLD DATE		LGL DATE	
XF DATE		LAND DATE	04/03/2025 MLU
INC DATE		AG DATE	

VALUATION SUMMARY

VALUATION BY		STANDARD
Tax Group: 2	Tax Dist:	
BUILDING MARKET VALUE		364,540
TOTAL MARKET OB/XF VALUE		9,244
TOTAL LAND VALUE - MARKET		70,000
TOTAL MARKET VALUE		443,784
SOH/AGL Deduction		151,652
ASSESSED VALUE		292,132
TOTAL EXEMPTION VALUE	HX HB	50,722
BASE TAXABLE VALUE		241,410
TOTAL JUST VALUE		443,784
NCON VALUE		0
INCOME VALUE		
PREVIOUS YEAR MKT VALUE		447,662

PERMIT NUM	DESCRIPTION	AMT	ISSUED
39442	SFR	0	03/11/2020

SALES DATA

OFF RECORD Number	DATE	TYPE INST	Q U	V I	RSN CD	SALE PRICE
1470/928	5/25/2022	WD	Q	V	01	29,900
GRANTOR: ROWAN RUTHIE RENE						
GRANTEE: PINCHOUCK LEE S						
1389/2129	7/24/2019	WD	Q	V	01	25,000
GRANTOR: MICHAEL C & STEPHANIE						
GRANTEE: LEE S & LAUREN M PI						

BUILDING NOTES

BUILDING DIMENSIONS

BAS= W16 S2 FSP= W24 S10 E24 N10$ S10 W24 N11 W17 S14 W5 S18 E5 S11 FGR= S30 E23 N22 W15 N8 W8$ E8 S8 E15 N3 FOP= E30 N8 W30 S8$ N8 E34 N41$.

EXTRA FEATURES

LN	OB/XF CODE	DESCRIPTION	BLD	CAP	L	W	UNITS	UT	Adj R	ADJ UNIT PRICE	ORIG COND	YEAR ON	YEAR ACTUAL	Q	% COND	OB/XF MKT VALUE	NOTES
1	0190	FPLC PF	0	100	0	0	1.00	UT	1,200.00	1,200.00	100	2020	2020	3	100	1,200	
2	0166	CONC,PAVMT	0	100	0	0	2,686.00	UT	2.25	2.25	100	2020	2020	3	100	6,044	
3	0294	SHED WOOD/	0	100	0	0	1.00	UT	2,000.00	2,000.00	100	2023	2022		100	2,000	

LAND DESCRIPTION

TOTAL OB/XF 9,244

LN	USE CODE	CLS	LAND USE DESCRIPTION	CAP	RD	LOC ZONE	FRONT	DEPTH	TOT LND UTS	UNIT TYPE	DT	DPTH FACT	% COND	TOT ADJ	UNIT PRICE	ADJ UNIT PRICE	LAND VALUE	OTHER ADJUSTMENTS AND NOTES	YEAR	DENSITY	DECL	FRZ	YR	CONSRV
1	0100	C	SFR	100			0.00	0.00	1.00	LT		1.00	1.00	1.00	35,000.00	35,000.00	35,000							
2	0000	C	VAC RES	100			0.00	0.00	1.00	LT		1.00	1.00	1.00	35,000.00	35,000.00	35,000							

REVIEW DATE 02/20/2023 BY KS Total Acres: 1.93 Total Land Value: 70,000 Market: 0 Agricultural: 0 Common: 70,000 PRINTED 11/18/2025 BY SYS