ALL OF S1/2 OF SW1/4 LYING NE
FLA POWER N R/W LINE EX E 60
FT FOR RD R/W & EX RD R/W FOR

BERRY CHRISTOPHER L/BERRY ESTHER A
5278 SW CR 138
FORT WHITE, FL 32038

2026

21-7S-16-04273-001

COLUMBIA COUNTY PROPERTY

BUILDING CHARACTERISTICS

ELEMENT	CD	CONSTRUCTION
Exterior Wall	05	AVERAGE 100
Roof Structur	03	GABLE/HIP 100
Roof Cover	03	COMP SHNGL 100
Interior Wall	05	DRYWALL 100
Interior Floo	14	CARPET 90
Interior Floo	06	VINYL ASB 10
Air Condition	03	CENTRAL 100
Heating Type	04	AIR DUCTED 100
Bedrooms		3 100
Bathrooms		2 100
Frame	01	NONE 100
Stories	1.	1. 100
Architectual	05	CONV 100
Units		0 100
Condition Adj	03	03 100
Kitchen Adjus	01	01 100
Quality	05	05
DOR CODE	5000	IMPROVED AG
MAP NUM		MKT AREA 02
NEIGHBORHOOD/LOC	21716.00	1.00/

AREA TYPE	TOTAL GROSS AREA	PCT OF BASE	YEAR	TOT ADJ AREA	SUBAREA MARKET VALUE
BAS	1,152	100		1,152	91,315
FSP	312	40		125	9,908
FST	176	55		97	7,689
UCP	664	20		133	10,543
UDU	192	55		106	8,402
UOP	60	20		12	951
UOP	84	20		17	1,348
UOP	168	20		34	2,695
TOTALS	2,808			1,676	132,850

MARKET ADJUSTMENTS

TYPE	MDL	EFF. AREA	TOT ADJ PTS	EFF. BASE RATE	REPL. COST NEW	AYB	EYB	ECON	FNCT		NORM	% COND
0300	01	1,676	108.2900	132.11	221,416	1983	1983	0	0	0	40.00	60.00

2 SFR PILING 0% - 2021 Heated Area: 1152 HX Base Yr

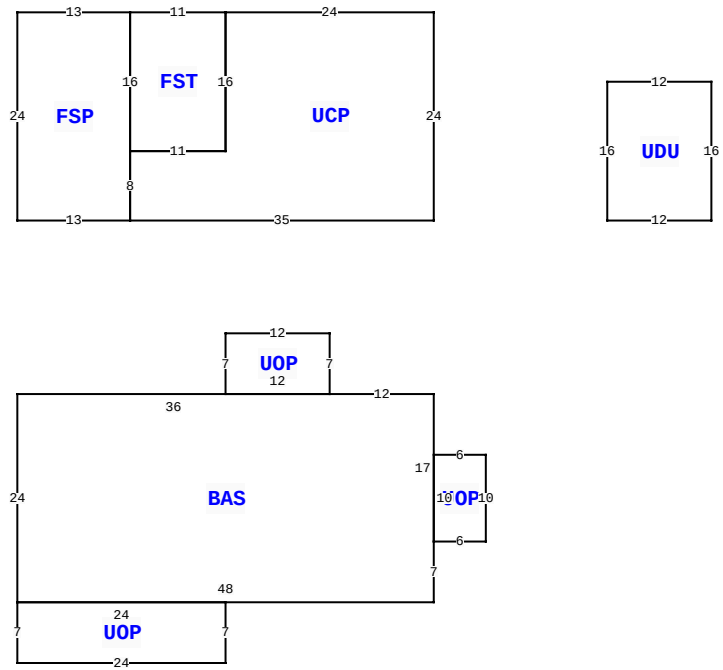

5278 SW COUNTY ROAD 138 , FORT WHITE

BLD DATE		LGL DATE	
XF DATE		LAND DATE	05/14/2024 MLU
INC DATE		AG DATE	

VALUATION SUMMARY

VALUATION BY	STANDARD
Tax Group: 3	Tax Dist:
BUILDING MARKET VALUE	231,694
TOTAL MARKET OB/XF VALUE	44,406
TOTAL LAND VALUE - MARKET	443,079
TOTAL MARKET VALUE	348,850
SOH/AGL Deduction	0
ASSESSED VALUE	348,850
TOTAL EXEMPTION VALUE	0
BASE TAXABLE VALUE	348,850
TOTAL JUST VALUE	719,179
NCON VALUE	0
INCOME VALUE	
PREVIOUS YEAR MKT VALUE	719,479

SALE:1:1: REFER TO NOTE ABOUT SALE ON PRCL #04343-

PERMIT NUM	DESCRIPTION	AMT	ISSUED
000047431	Electrical Servic	0	06/12/2023
000047432	Electrical Servic	0	06/12/2023
7553	M H	60	09/02/1993

SALES DATA

OFF RECORD Number	DATE	TYPE INST	Q U	V I	RSN CD	SALE PRICE
1414/2212	5/28/2020	WD	Q	I	05	1,290,000
GRANTOR: MELVIN J ERB JR & SUS						
GRANTEE: CHRISTOPHER L & EST						
1321/1889	8/31/2016	WD	Q	I	01	875,000
GRANTOR: LAKE CITY ASSOCIATES,						
GRANTEE: MELVIN J ERB JR & S						

BUILDING NOTES

BUILDING DIMENSIONS

BAS= W12 UOP= N7 W12 S7 E12$ W36 S24 UOP= S7 E24 N7 W24$ E48 N7 UOP= E6 N10 W6 S10$ N17$ PTR= N20 UCP= N24 W24 FST= W11S16 E11 N16$ S16 W11 FSP= N16 W13S24 E13N8$ S8 E35 PTR= E20 UDU= E12 N16 W12 S16$ W20$.

EXTRA FEATURES

LN	OB/XF CODE	DESCRIPTION	BLD	CAP	L	W	UNITS	UT	Adj R	ADJ UNIT PRICE	ORIG COND	YEAR ON	YEAR ACTUAL	Q	% COND	OB/XF MKT VALUE	NOTES
1	0040	BARN,POLE	0	0	24	60	1,440.00	UT	2.50	2.50	50	0	0	3	50	1,800	
2	0080	DECKING	0	0	16	15	240.00	UT	5.00	5.00	50	0	0	3	50	600	
3	0166	CONC,PAVMT	0	0	8	24	192.00	UT	2.00	2.00	100	0	0	3	100	384	
4	9945	Well/Sept	0	0	0	0	1.00	UT	7,000.00	7,000.00	100			3	100	7,000	
5	0260	PAVEMENT-A	0	0	1980	10	19,800.00	UT	1.10	1.10	90	2003	2003	3	90	19,602	
6	0040	BARN,POLE	0	0	62	64	3,968.00	UT	2.50	2.50	100	2003	2003	3	100	9,920	
7	0104	GENERATOR	0	0	0	0	1.00	UT	6,000.00	6,000.00	100	2024	2023		85	5,100	

LAND DESCRIPTION

TOTAL OB/XF 44,406

LN	USE CODE	CLS	LAND USE DESCRIPTION	CAP	RD	LOC ZONE	FRONT	DEPTH	TOT LND UTS	UNIT TYPE	DT	DPTH FACT	% COND	TOT ADJ	UNIT PRICE	ADJ UNIT PRICE	LAND VALUE	OTHER ADJUSTMENTS AND NOTES	YEAR	DENSITY	DECL	FRZ	YR	CONSRV
1	0100	C	SFR	0		A-1	0.00	0.00	12.00	AC		1.00	1.00	0.65	9,000.00	5,850.00	70,200							
2	5910	A	SWAMP/CYPRES	0					63.74	AC		1.00	1.00	1.00	40.00	40.00	2,550							
3	9910	M	MKT.VAL.AG	0					63.74	AC		1.00	1.00	0.65	9,000.00	5,850.00	372,879							

REVIEW DATE 06/20/2023 BY TW Total Acres: 75.74 Total Land Value: 72,750 Market: 372,879 Agricultural: 2,550 Common: 70,200 PRINTED 11/10/2025 BY SYS

ALL OF S1/2 OF SW1/4 LYING NE
FLA POWER N R/W LINE EX E 60
FT FOR RD R/W & EX RD R/W FOR

BERRY CHRISTOPHER L/BERRY ESTHER A
5278 SW CR 138
FORT WHITE, FL 32038

2026

21-7S-16-04273-001

BUILDING CHARACTERISTICS

ELEMENT	CD	CONSTRUCTION
Exterior Wall	10	ABOVE AVG. 100
Roof Structur	03	GABLE/HIP 100
Roof Cover	03	COMP SHNGL 100
Interior Wall	06	CUST PANEL 100
Interior Floo	12	HARDWOOD 100
Air Condition	02	WINDOW 100
Heating Type	03	FORCED AIR 100
Bedrooms		1 100
Bathrooms		1 100
Frame	01	NONE 100
Stories	1.	1. 100
Architectual	05	CONV 100
Units		0 100
Condition Adj	03	03 100
Kitchen Adjus	01	01 100
Quality	05	05
DOR CODE	5000	IMPROVED AG
MAP NUM		MKT AREA 02
NEIGHBORHOOD/LOC	21716.00	1.00/

AREA TYPE	TOTAL GROSS AREA	PCT OF BASE	YEAR	TOT ADJ AREA	SUBAREA MARKET VALUE
BAS	1,144	100		1,144	95,991
FSP	84	40		34	2,853
TOTALS	1,228			1,178	98,844

MARKET ADJUSTMENTS

TYPE	MDL	EFF. AREA	TOT ADJ PTS	EFF. BASE RATE	REPL. COST NEW	AYB	EYB	ECON	FNCT		NORM	% COND
0100	01	1,178	115.2600	129.09	152,068	1984	1984	0	0	0	35.00	65.00

3 SINGLE FAM 0% - 2021 Heated Area: 1144 HX Base Yr

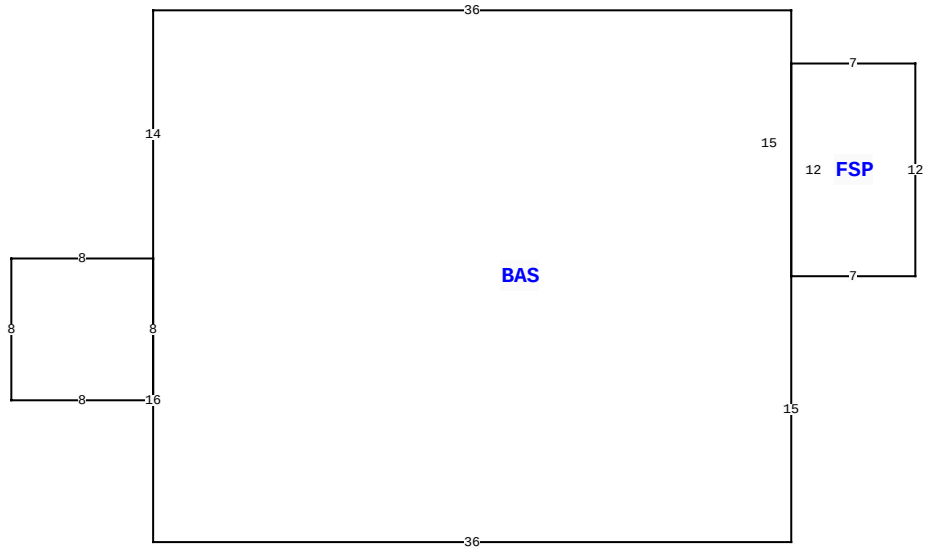

5278 SW COUNTY ROAD 138 , FORT WHITE

BLD DATE		LGL DATE	
XF DATE		LAND DATE	05/14/2024 MLU
INC DATE		AG DATE	

COLUMBIA COUNTY PROPERTY

VALUATION SUMMARY

VALUATION BY	STANDARD
Tax Group: 3	Tax Dist:
BUILDING MARKET VALUE	231,694
TOTAL MARKET OB/XF VALUE	44,406
TOTAL LAND VALUE - MARKET	443,079
TOTAL MARKET VALUE	348,850
SOH/AGL Deduction	0
ASSESSED VALUE	348,850
TOTAL EXEMPTION VALUE	0
BASE TAXABLE VALUE	348,850
TOTAL JUST VALUE	719,179
NCON VALUE	0
INCOME VALUE	
PREVIOUS YEAR MKT VALUE	719,479

PERMIT NUM	DESCRIPTION	AMT	ISSUED

SALES DATA

OFF RECORD Number	DATE	TYPE INST	Q / U	V / I	RSN CD	SALE PRICE
1414/2212	5/28/2020	WD	Q	I	05	1,290,000
GRANTOR: MELVIN J ERB JR & SUS						
GRANTEE: CHRISTOPHER L & EST						
1321/1889	8/31/2016	WD	Q	I	01	875,000
GRANTOR: LAKE CITY ASSOCIATES,						
GRANTEE: MELVIN J ERB JR & S						

BUILDING NOTES

BUILDING DIMENSIONS

BAS= W36 S14 W8 S8 E8 N8 S16 E36 N15 FSP= E7N12 W7 S12$ N15$.

EXTRA FEATURES

L N	OB/XF CODE	DESCRIPTION	BLD	CAP	L	W	UNITS	UT	Adj R	ADJ UNIT PRICE	ORIG COND	YEAR ON	YEAR ACTUAL	Q	% COND	OB/XF MKT VALUE	NOTES

LAND DESCRIPTION

TOTAL OB/XF 0

L N	USE CODE	CLS	LAND USE DESCRIPTION	CAP	R D	LOC ZONE	FRONT	DEPTH	TOT LND UTS	UNIT TYPE	D T	DPTH FACT	% COND	TOT ADJ	UNIT PRICE	ADJ UNIT PRICE	LAND VALUE	OTHER ADJUSTMENTS AND NOTES	YEAR	DENSITY	DECL	FRZ	YR	CONSRV

REVIEW DATE 06/20/2023 BY TW Total Acres: 75.74 Total Land Value: 72,750 Market: 372,879 Agricultural: 2,550 Common: 70,200 PRINTED 11/10/2025 BY SYS