COMM INTERS S LINE OF SEC & E R/
NW ALONG R/W 621 FT FOR POB, RUN
FT, NW 135.71 FT, W 169.19 FT TO

SONI DHIMANT/SONI GITA
115 SW ENCHANTED CT
LAKE CITY, FL 32024

2026

21-4S-17-08657-000

COLUMBIA COUNTY PROPERTY

BUILDING CHARACTERISTICS

ELEMENT	CD	CONSTRUCTION
Exterior Wall	17	MSNRY STUC 90
Exterior Wall	19	COMMON BRK 10
Roof Structur	09	RIDGE FRME 100
Roof Cover	04	BUILT-UP 100
Interior Wall	05	DRYWALL 100
Interior Floo	08	SHT VINYL 100
Ceiling	01	FIN.SUSPD 100
Air Condition	06	ENG CENTRL 100
Heating Type	09	ENG F AIR 100
Fixtures		4 100
Frame	03	MASONRY 100
Story Height		10 100
RMS		3 100
Stories	0	0 100
Units		0 100
Condition Adj	03	03 100
Quality	04	04
DOR CODE	1126	CONV STORE/GAS
MAP NUM		MKT AREA 02
NEIGHBORHOOD/LOC	21417.020	1.00/

AREA TYPE	TOTAL GROSS AREA	PCT OF BASE	YEAR	TOT ADJ AREA	SUBAREA MARKET VALUE
BAS	1,791	100		1,791	60,769
CAN	426	30		128	4,343
CAN	1,440	30		432	14,658
FST	533	50		266	9,026
TOTALS	4,190			2,617	88,795

MARKET ADJUSTMENTS

TYPE	MDL	EFF. AREA	TOT ADJ PTS	EFF. BASE RATE	REPL. COST NEW	AYB	EYB	ECON	FNCT		NORM	% COND
4300	04	2,617	90.4810	67.86	177,590	1952	1985	0	0	0	50.00	50.00

1 NBHD CONVE 0% - 0 Heated Area: 1791 HX Base Yr

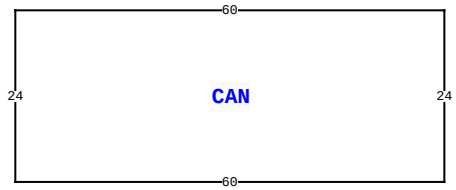

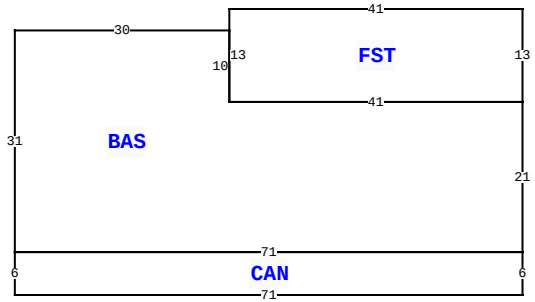

5277 S US HIGHWAY 441 , LAKE CITY

BLD DATE		LGL DATE	
XF DATE		LAND DATE	
INC DATE		AG DATE	

VALUATION SUMMARY

VALUATION BY	STANDARD
Tax Group: 2	Tax Dist:
BUILDING MARKET VALUE	88,795
TOTAL MARKET OB/XF VALUE	6,009
TOTAL LAND VALUE - MARKET	23,100
TOTAL MARKET VALUE	117,904
SOH/AGL Deduction	0
ASSESSED VALUE	117,904
TOTAL EXEMPTION VALUE	0
BASE TAXABLE VALUE	117,904
TOTAL JUST VALUE	117,904
NCON VALUE	0
INCOME VALUE	
PREVIOUS YEAR MKT VALUE	117,904

SALE:1:1: CONVENIENCE STORE/ MAY BE PERS PROP INVO

PRMT:1:1: GAS PUMP CANOPY

PERMIT NUM	DESCRIPTION	AMT	ISSUED
14323	ADDN COMM	85	07/28/1998

SALES DATA

OFF RECORD Number	DATE	TYPE INST	Q U /	V I /	RSN CD	SALE PRICE
0852/2063	2/02/1998	WD	Q	I		109,000

GRANTOR: BENZ

GRANTEE: SONI

BUILDING NOTES

BUILDING DIMENSIONS

BAS= W30 S31 CAN= S6 E71 N6 W71$ E71 N21 FST= N13 W41 S13 E41$W41 N10$ PTR=N30 CAN= N24 W60 S24 E60$ S30$.

EXTRA FEATURES

LN	OB/XF CODE	DESCRIPTION	BLD	CAP	L	W	UNITS	UT	Adj R	ADJ UNIT PRICE	ORIG COND	YEAR ON	YEAR ACTUAL	Q	% COND	OB/XF MKT VALUE	NOTES
1	0260	PAVEMENT-A	0	0	0	0	1.00	UT	0.00	0.00	100	0	0	3	100	4,400	
2	0166	CONC,PAVMT	0	0	0	0	850.00	UT	1.50	1.50	100	1998	1998	3	100	1,275	
3	0140	CLFENCE 6	0	0	0	0	88.00	UT	3.80	3.80	100	1998	1998	3	100	334	

LAND DESCRIPTION

TOTAL OB/XF 6,009

LN	USE CODE	CLS	LAND USE DESCRIPTION	CAP	RD	LOC ZONE	FRONT	DEPTH	TOT LND UTS	UNIT TYPE	DT	DPTH FACT	% COND	TOT ADJ	UNIT PRICE	ADJ UNIT PRICE	LAND VALUE	OTHER ADJUSTMENTS AND NOTES	YEAR	DENSITY	DECL	FRZ	YR	CONSRV
1	1410	C	CONV STORE	0		A-1	0.00	0.00	0.60	AC		1.00	1.00	1.40	27,500.00	38,500.00	23,100							

REVIEW DATE 06/22/2017 BY DF Total Acres: 0.60 Total Land Value: 23,100 Market: 0 Agricultural: 0 Common: 23,100 PRINTED 11/19/2025 BY SYS