BEG AT NW COR OF SE1/4 OF NW 1/4
FT, CONT E 427.77 FT, S 80.88 FT
S 1214.60 FT TO N R/W OF SE RACE

FOREMAN MICHAEL C/FOREMAN STEPHANIE W
385 SE RACETRACK LN
LAKE CITY, FL 32025

2026

21-4S-17-08631-006

COLUMBIA COUNTY PROPERTY

BUILDING CHARACTERISTICS

ELEMENT	CD	CONSTRUCTION
Exterior Wall	32	HARDIE BRD 100
Roof Structur	08	IRREGULAR 100
Roof Cover	03	COMP SHNGL 100
Interior Wall	05	DRYWALL 100
Interior Floo	15	HARDTILE 90
Interior Floo	12	HARDWOOD 10
Air Condition	03	CENTRAL 100
Heating Type	04	AIR DUCTED 100
Bedrooms		4 100
Bathrooms		3.5 100
Frame	02	WOOD FRAME 100
Stories	2.	2. 100
Units		0 100
Quality	09	09
DOR CODE	5000	IMPROVED AG
MAP NUM		MKT AREA 02
NEIGHBORHOOD/LOC	21417.00	1.00/

AREA TYPE	TOTAL GROSS AREA	PCT OF BASE	YEAR	TOT ADJ AREA	SUBAREA MARKET VALUE
BAS	3,261	100		3,261	538,673
FGR	658	55		362	59,797
FOP	48	30		14	2,312
FOP	66	30		20	3,304
FOP	352	30		106	17,509
FSP	1,224	40		490	80,942
FST	40	55		22	3,634
FUS	986	100		986	162,874
TOTALS	6,635			5,261	869,045

MARKET ADJUSTMENTS

TYPE	MDL	EFF. AREA	TOT ADJ PTS	EFF. BASE RATE	REPL. COST NEW	AYB	EYB	ECON	FNCT		NORM	% COND
0100	01	5,261	156.8999	175.73	924,516	2019	2019	0	0	0	6.00	94.00

1 SINGLE FAM 100% - 2021 Heated Area: 4247 HX Base Yr 2021

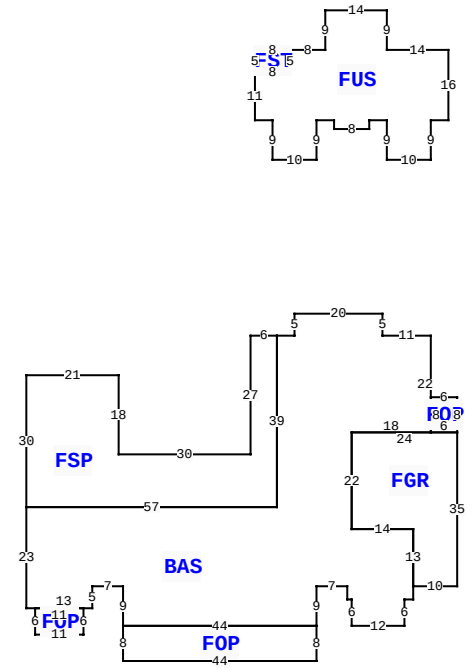

385 SE RACETRACK LN, LAKE CITY

BLD DATE		LGL DATE	
XF DATE		LAND DATE	05/03/2023 MLU
INC DATE		AG DATE	

VALUATION SUMMARY

VALUATION BY		STANDARD
Tax Group: 2	Tax Dist:	
BUILDING MARKET VALUE		869,045
TOTAL MARKET OB/XF VALUE		111,076
TOTAL LAND VALUE - MARKET		193,500
TOTAL MARKET VALUE		1,002,021
SOH/AGL Deduction		225,087
ASSESSED VALUE		776,934
TOTAL EXEMPTION VALUE	HX HB	50,722
BASE TAXABLE VALUE		726,212
TOTAL JUST VALUE		1,173,621
NCON VALUE		0
INCOME VALUE		
PREVIOUS YEAR MKT VALUE		1,185,605

PERMIT NUM	DESCRIPTION	AMT	ISSUED
39942	ELECTRICAL	0	06/15/2020
38414	POOL ENCL	175	07/29/2019
37834	POOL	613	03/06/2019
37463	SFR	2,164	11/21/2018

SALES DATA

OFF RECORD Number	DATE	TYPE INST	Q / U	V / I	RSN CD	SALE PRICE
1335/0233	4/13/2017	WD	Q	V	01	174,200
GRANTOR: PETER W GIEBEIG						
GRANTEE: MICHAEL C & STEPHAN						
1335/0231	4/13/2017	WD	U	V	11	100
GRANTOR: ELAINE K TOLAR						
GRANTEE: PETER W GIEBEIG						

BUILDING NOTES

BUILDING DIMENSIONS

BAS=[ORIG=0,0] W11 N5 W20 S5 W4 S39 W57 S23 E2 E13 N5 E7 S9
E44 N9 E7 S3 E1 S6 E12 N6 E2 N3 N13 W14 N22 E18 N22 $
FSP=[ORIG=-35,0] W6 S27 W30 N18 W21 S30 E57 N39 $
FUS=[ORIG=0,-40] N9 E4 N16 W14 N9 W14 S9 W8 S5 W8 S11 E4 S9
E10 N9 E4 S2 E8 N2 E4 S9 E10 $
FGR=[ORIG=-4,57] E10 N35 W24 S22 E14 S13 $
FOP=[ORIG=-70,66] S8 E44 N8 W44 $
FOP=[ORIG=-90,62] S6 E11 N6 W11 $
FOP=[ORIG=0,22] E6 N8 W6 S8 $
FST=[ORIG=-32,-65] W8 S5 E8 N5 $.

EXTRA FEATURES

LN	OB/XF CODE	DESCRIPTION	BLD	CAP	L	W	UNITS	UT	Adj R	ADJ UNIT PRICE	ORIG COND	YEAR ON	YEAR ACTUAL	Q	% COND	OB/XF MKT VALUE	NOTES
1	0190	FPLC PF	0	100	0	0	1.00	UT	1,200.00	1,200.00	100	2019	2019	3	100	1,200	
2	0166	CONC,PAVMT	0	100	0	0	1,768.00	UT	2.25	2.25	100	2019	2019	3	100	3,978	
3	0280	POOL R/CON	0	100	0	0	857.00	UT	70.00	70.00	100	2019	2019	3	89	53,391	
4	0282	POOL ENCL	0	100	0	0	2,052.00	UT	15.00	15.00	100	2019	2019	3	65	20,007	
5	0030	BARN,MT	0	100	40	60	1.00	UT	30,000.00	30,000.00	100	2021	2020		100	30,000	
6	0252	LEAN-TO W/	0	100	0	0	1.00	UT	2,000.00	2,000.00	100	2021	2020		100	2,000	
7	0252	LEAN-TO W/	0	100	0	0	1.00	UT	500.00	500.00	100	2021	2020		100	500	

LAND DESCRIPTION

TOTAL OB/XF 111,076

LN	USE CODE	CLS	LAND USE DESCRIPTION	CAP	RD	LOC ZONE	FRONT	DEPTH	TOT LND UTS	UNIT TYPE	DT	DPTH FACT	% COND	TOT ADJ	UNIT PRICE	ADJ UNIT PRICE	LAND VALUE	OTHER ADJUSTMENTS AND NOTES	YEAR	DENSITY	DECL	FRZ	YR	CONSRV
1	0100	C	SFR	100		00	0.00	0.00	2.50	AC		1.00	1.00	1.00	4,500.00	4,500.00	11,250							
2	6200	A	PASTURE 3	0		00	0.00	0.00	28.00	AC		1.00	1.00	1.00	280.00	280.00	7,840							
3	5600	A	TIMBER 3	0		00	0.00	0.00	10.00	AC		1.00	1.00	1.00	281.00	281.00	2,810							
4	9910	M	MKT.VAL.AG	0		A-1	0.00	0.00	40.50	AC		1.00	1.00	1.00	4,500.00	4,500.00	182,250							

REVIEW DATE 07/16/2020 BY BC Total Acres: 40.50 Total Land Value: 21,900 Market: 182,250 Agricultural: 10,650 Common: 11,250 PRINTED 11/07/2025 BY SYS