COMM NE COR OF SEC & RUN W 1719.
THENCE W 846.84 FT S 490.55 FT F
CONT S 236.34 FT TO POINT OF A C

GIEBEIG B TRENT
697 SE HOLLY TERR
LAKE CITY, FL 32025

2026

21-4S-17-08631-002

COLUMBIA COUNTY PROPERTY

BUILDING CHARACTERISTICS

ELEMENT	CD	CONSTRUCTION
Exterior Wall	19	COMMON BRK 100
Roof Structur	04	WOOD TRUSS 100
Roof Cover	03	COMP SHNGL 100
Interior Wall	05	DRYWALL 100
Interior Floo	15	HARDTILE 80
Interior Floo	12	HARDWOOD 20
Air Condition	03	CENTRAL 100
Heating Type	04	AIR DUCTED 100
Bedrooms		4 100
Bathrooms		2 100
Frame	02	WOOD FRAME 100
Stories	1.	1. 100
Architectual	05	CONV 100
Units		0 100
Condition Adj	03	03 100
Kitchen Adjus	01	01 100
Quality	07	07
DOR CODE	5000	IMPROVED AG
MAP NUM		MKT AREA 02
NEIGHBORHOOD/LOC	21417.00	1.00/

AREA TYPE	TOTAL GROSS AREA	PCT OF BASE	YEAR	TOT ADJ AREA	SUBAREA MARKET VALUE
BAS	2,717	100		2,717	312,972
FGR	552	55		304	35,018
FOP	248	30		74	8,524
FOP	624	30		187	21,540
PTO	624	5		31	3,571
UCP	864	20		173	19,928
UGR	1,296	45		583	67,155
TOTALS	6,925			4,069	468,708

MARKET ADJUSTMENTS

TYPE	MDL	EFF. AREA	TOT ADJ PTS	EFF. BASE RATE	REPL. COST NEW	AYB	EYB	ECON	FNCT		NORM	% COND
0100	01	4,069	126.9730	142.21	578,652	2006	2006	0	0	0	19.00	81.00

1 SINGLE FAM 100% - 2008 Heated Area: 2717 HX Base Yr 2008

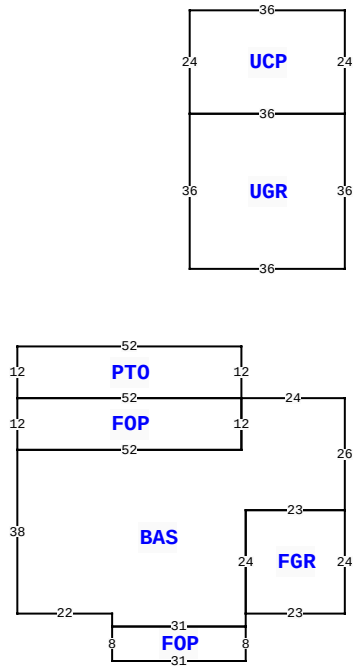

697 SE HOLLY TER, LAKE CITY

BLD DATE		LGL DATE	
XF DATE		LAND DATE	05/03/2023 MLU
INC DATE		AG DATE	

VALUATION SUMMARY

VALUATION BY		STANDARD
Tax Group: 2	Tax Dist:	
BUILDING MARKET VALUE		468,708
TOTAL MARKET OB/XF VALUE		6,762
TOTAL LAND VALUE - MARKET		48,195
TOTAL MARKET VALUE		485,278
SOH/AGL Deduction		150,018
ASSESSED VALUE		335,260
TOTAL EXEMPTION VALUE	HX HB	50,722
BASE TAXABLE VALUE		284,538
TOTAL JUST VALUE		523,665
NCON VALUE		0
INCOME VALUE		
PREVIOUS YEAR MKT VALUE		529,452

PERMIT NUM	DESCRIPTION	AMT	ISSUED
24192	SFR	791	03/07/2006

SALES DATA

OFF RECORD Number	DATE	TYPE INST	Q U	V I	RSN CD	SALE PRICE
1259/1802	7/31/2013	WD	U	V	11	100
GRANTOR: PETER W GIEBEIG						
GRANTEE: TRENT GIEBEIG						
1121/0731	6/01/2007	WD	Q	I	03	100
GRANTOR: TRENT GIEBEIG CONSTRU						
GRANTEE: B TRENT GIEBEIG						

BUILDING NOTES

BUILDING DIMENSIONS

BAS= W24 PTO= N12 W52 S12 E52$ FOP= W52 S12 E52 N12$ S12 W52 S38 E22 S3 FOP= S8 E31 N8 W31$ E31 N3 FGR= E23 N24 W23 S24$ N24 E23 N26$ PTR= N30 UGR= N36 UCP= N24 W36 S24 E36$ W36 S36 E36$ S30$.

EXTRA FEATURES

LN	OB/XF CODE	DESCRIPTION	BLD	CAP	L	W	UNITS	UT	Adj R	ADJ UNIT PRICE	ORIG COND	YEAR ON	YEAR ACTUAL	Q	% COND	OB/XF MKT VALUE	NOTES
1	0166	CONC,PAVMT	0	100	0	0	2,254.00	UT	3.00	3.00	100	2006	2006	3	100	6,762	

LAND DESCRIPTION

TOTAL OB/XF 6,762

LN	USE CODE	CLS	LAND USE DESCRIPTION	CAP	RD	LOC ZONE	FRONT	DEPTH	TOT LND UTS	UNIT TYPE	DT	DPTH FACT	% COND	TOT ADJ	UNIT PRICE	ADJ UNIT PRICE	LAND VALUE	OTHER ADJUSTMENTS AND NOTES	YEAR	DENSITY	DECL	FRZ	YR	CONSRV
1	0100	C	SFR	100			0.00	0.00	1.00	AC		1.00	1.00	1.00	8,500.00	8,500.00	8,500							
2	6200	A	PASTURE 3	0			0.00	0.00	4.67	AC		1.00	1.00	1.00	280.00	280.00	1,308							
3	9910	M	MKT.VAL.AG	0			0.00	0.00	4.67	AC		1.00	1.00	1.00	8,500.00	8,500.00	39,695							

REVIEW DATE 06/20/2017 BY RP Total Acres: 5.67 Total Land Value: 9,808 Market: 39,695 Agricultural: 1,308 Common: 8,500 PRINTED 11/07/2025 BY SYS