LOT 1 KENSINGTON S/D.
833-979, 853-940, 865-1817, 900-

RATLIFF ROBIN/RATLIFF CRYSTAL
122 SW ROYAL CT
LAKE CITY, FL 32024

2026

21-4S-16-03081-101

COLUMBIA COUNTY PROPERTY

BUILDING CHARACTERISTICS

ELEMENT	CD	CONSTRUCTION
Exterior Wall	19	COMMON BRK 100
Roof Structur	04	WOOD TRUSS 100
Roof Cover	03	COMP SHNGL 100
Interior Wall	05	DRYWALL 100
Interior Floo	12	HARDWOOD 90
Interior Floo	14	CARPET 10
Air Condition	03	CENTRAL 100
Heating Type	04	AIR DUCTED 100
Bedrooms		4 100
Bathrooms		3 100
Frame	02	WOOD FRAME 100
Stories	2.	2. 100
Architectual	05	CONV 100
Units		0 100
Condition Adj	03	03 100
Kitchen Adjus	01	01 100
Quality	06	06

DOR CODE	0100	SINGLE FAMILY	
MAP NUM		MKT AREA	06
NEIGHBORHOOD/LOC	21416.040	1.00/	

AREA TYPE	TOTAL GROSS AREA	PCT OF BASE	YEAR	TOT ADJ AREA	SUBAREA MARKET VALUE
BAS	2,217	100		2,217	251,940
FGR	650	55		358	40,683
FOP	44	30		13	1,478
FSP	256	40		102	11,591
FUS	336	100		336	38,183
TOTALS	3,503			3,026	343,874

MARKET ADJUSTMENTS

TYPE	MDL	EFF. AREA	TOT ADJ PTS	EFF. BASE RATE	REPL. COST NEW	AYB	EYB	ECON	FNCT		NORM	% COND
0100	01	3,026	126.8338	142.05	429,843	2005	2005	0	0	0	20.00	80.00

1 SINGLE FAM 100% - 2013 Heated Area: 2553 HX Base Yr 2013

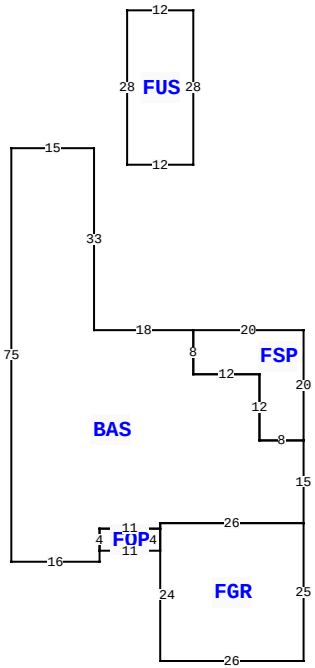

122 SW ROYAL CT, LAKE CITY

BLD DATE		LGL DATE	
XF DATE		LAND DATE	04/03/2025 MLU
INC DATE		AG DATE	

VALUATION SUMMARY

VALUATION BY		STANDARD
Tax Group: 3	Tax Dist:	
BUILDING MARKET VALUE		343,874
TOTAL MARKET OB/XF VALUE		8,110
TOTAL LAND VALUE - MARKET		35,000
TOTAL MARKET VALUE		386,984
SOH/AGL Deduction		134,588
ASSESSED VALUE		252,396
TOTAL EXEMPTION VALUE	HX HB	50,722
BASE TAXABLE VALUE		201,674
TOTAL JUST VALUE		386,984
NCON VALUE		0
INCOME VALUE		
PREVIOUS YEAR MKT VALUE		391,283

SALE:1:1: SALE FOR SEVERAL LOTS, ASSESSED FOR 1 LO

PERMIT NUM	DESCRIPTION	AMT	ISSUED
22721	SFR	629	01/24/2005

SALES DATA

OFF RECORD Number	DATE	TYPE INST	Q U	V I	RSN CD	SALE PRICE
1243/2779	10/30/2012	WD	U	I	12	188,000
GRANTOR: FEDERAL NATIONAL MORT						
GRANTEE: ROBIN & CRYSTAL RAT						
1236/1965	4/20/2012	WD	U	I	12	294,400
GRANTOR: MICHAEL & CHERRY Y EV						
GRANTEE: FEDERAL NATIONAL MO						

BUILDING NOTES

BUILDING DIMENSIONS

BAS= W18 N33 W15 S75 E16 N2 FOP= E11 N4 W11 S4$ N4 E11 FGR= S24 E26 N25 W26 S1$ N1 E26 N15 FSP= N20 W20 S8 E12 S12 E8$ W8 N12 W12 N8$ PTR= N30 FUS= N28 W12 S28 E12$ S30$.

EXTRA FEATURES

LN	OB/XF CODE	DESCRIPTION	BLD	CAP	L	W	UNITS	UT	Adj R	ADJ UNIT PRICE	ORIG COND	YEAR ON	YEAR ACTUAL	Q	% COND	OB/XF MKT VALUE	NOTES
1	0180	FPLC 1STRY	0	100	0	0	1.00	UT	2,000.00	2,000.00	100	2005	2005	3	100	2,000	
2	0166	CONC,PAVMT	0	100	0	0	1,444.00	UT	2.50	2.50	100	2005	2005	3	100	3,610	
3	0169	FENCE/WOOD	0	100	0	0	1.00	UT	0.00	0.00	100	2007	2007	3	100	1,200	
4	0120	CLFENCE 4	0	100	0	0	1.00	UT	0.00	0.00	100	2014	2014	3	100	100	
5	0294	SHED WOOD/	0	100	0	0	1.00	UT	1,200.00	1,200.00	100	2025	2024		100	1,200	

LAND DESCRIPTION

TOTAL OB/XF 8,110

LN	USE CODE	CLS	LAND USE DESCRIPTION	CAP	RD	LOC ZONE	FRONT	DEPTH	TOT LND UTS	UNIT TYPE	DT	DPTH FACT	% COND	TOT ADJ	UNIT PRICE	ADJ UNIT PRICE	LAND VALUE	OTHER ADJUSTMENTS AND NOTES	YEAR	DENSITY	DECL	FRZ	YR	CONSRV
1	0100	C	SFR	100		RSF-2	0.00	0.00	1.00	LT		1.00	1.00	1.00	35,000.00	35,000.00	35,000							

REVIEW DATE 04/08/2025 BY KS Total Acres: 0.51 Total Land Value: 35,000 Market: 0 Agricultural: 0 Common: 35,000 PRINTED 11/18/2025 BY SYS