LOT 4 BLOCK A FOREST COUNTRY
SECOND ADDITION.

HARRELL JOSEPH L/HARRELL DIANE D
374 SW SHORT LEAF DRIVE
LAKE CITY, FL 32024

2026

21-4S-16-03080-005

BUILDING CHARACTERISTICS

ELEMENT	CD	CONSTRUCTION
Exterior Wall	19	COMMON BRK 100
Roof Structur	03	GABLE/HIP 100
Roof Cover	03	COMP SHNGL 100
Interior Wall	05	DRYWALL 100
Interior Floo	14	CARPET 90
Interior Floo	08	SHT VINYL 10
Air Condition	03	CENTRAL 100
Heating Type	04	AIR DUCTED 100
Bedrooms		3 100
Bathrooms		3 100
Frame	01	NONE 100
Stories	1.	1. 100
Architectual	05	CONV 100
Units		0 100
Condition Adj	03	03 100
Kitchen Adjus	01	01 100
Quality	05	05
DOR CODE	0100	SINGLE FAMILY
MAP NUM		MKT AREA 06
NEIGHBORHOOD/LOC	21416.010	1.00/

AREA TYPE	TOTAL GROSS AREA	PCT OF BASE	YEAR	TOT ADJ AREA	SUBAREA MARKET VALUE
BAS	2,143	100		2,143	177,044
FGR	552	55		304	25,115
FOP	16	30		5	413
FSP	304	40		122	10,079
PTO	496	5		25	2,066
TOTALS	3,511			2,599	214,716

MARKET ADJUSTMENTS

TYPE	MDL	EFF. AREA	TOT ADJ PTS	EFF. BASE RATE	REPL. COST NEW	AYB	EYB	ECON	FNCT		NORM	% COND
0100	01	2,599	113.4840	127.10	330,333	1988	1988	0	0	0	35.00	65.00

1 SINGLE FAM 100% - 0 Heated Area: 2143 HX Base Yr

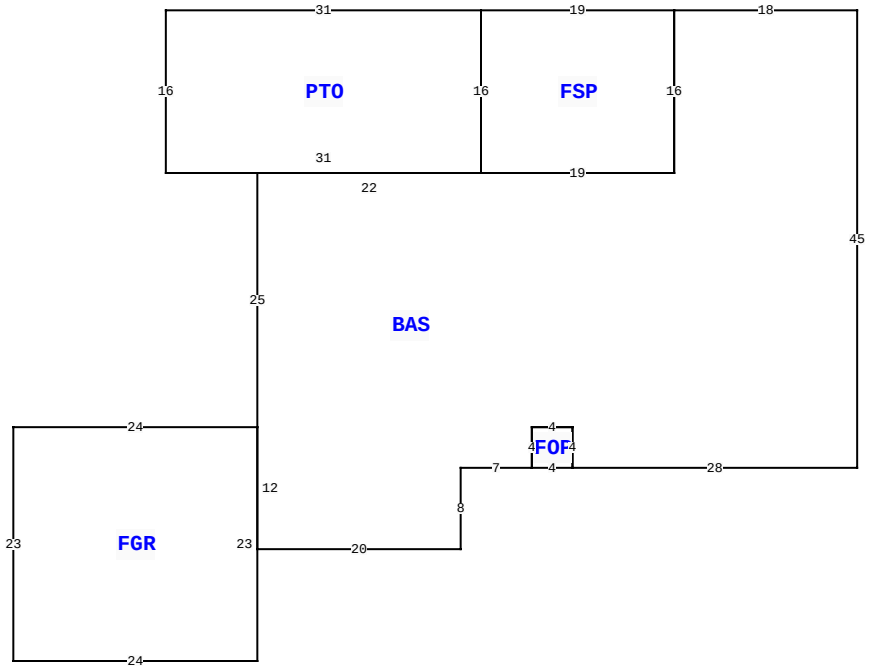

374 SW SHORT LEAF DR, LAKE CITY

BLD DATE		LGL DATE	
XF DATE		LAND DATE	04/03/2025 MLU
INC DATE		AG DATE	

COLUMBIA COUNTY PROPERTY

PAGE 1 of 1 3

VALUATION SUMMARY

VALUATION BY		STANDARD
Tax Group: 3	Tax Dist:	
BUILDING MARKET VALUE		214,716
TOTAL MARKET OB/XF VALUE		10,456
TOTAL LAND VALUE - MARKET		35,000
TOTAL MARKET VALUE		260,172
SOH/AGL Deduction		86,537
ASSESSED VALUE		173,635
TOTAL EXEMPTION VALUE	HX HB	50,722
BASE TAXABLE VALUE		122,913
TOTAL JUST VALUE		260,172
NCON VALUE		0
INCOME VALUE		
PREVIOUS YEAR MKT VALUE		260,472

SALE:1:1: LOT 4 BLK 4 FOREST COUNTRY SECOND ADDITI

PERMIT NUM	DESCRIPTION	AMT	ISSUED
000052027	Generator	0	01/09/2025
40462	REMODEL	0	08/27/2020
30943	MAINT/ALTR	50	04/16/2013

SALES DATA

OFF RECORD Number	DATE	TYPE INST	Q U	V I	RSN CD	SALE PRICE
0768/1064	12/10/1992	WD	Q	I		90,900
GRANTOR: JERRY PASBRIG						
GRANTEE: JOSEPH L HARRELL						
0644/0754	2/22/1988	WD	Q	V		9,000
GRANTOR: STEVENS ALEX H &						
GRANTEE: PASBRIG JERRY &						

BUILDING NOTES

BUILDING DIMENSIONS

BAS= W18 FSP= W19 S16 E19 N16$ S16 W19 PTO= N16 W31 S16 E31$ W22 S25 FGR= W24 S23E24 N23$ S12 E20 N8 E7 FOP= E4 N4 W4 S4$ N4 E4 S4 E28 N45$.

EXTRA FEATURES

LN	OB/XF CODE	DESCRIPTION	BLD	CAP	L	W	UNITS	UT	Adj R	ADJ UNIT PRICE	ORIG COND	YEAR ON	YEAR ACTUAL	Q	% COND	OB/XF MKT VALUE	NOTES
1	0166	CONC,PAVMT	0	100	0	0	1.00	UT	0.00	0.00	100	0	0	3	100	2,300	
2	0294	SHED WOOD/	0	100	12	12	144.00	UT	7.50	7.50	70	1993	1993	3	70	756	
3	0180	FPLC 1STRY	0	100	0	0	1.00	UT	2,000.00	2,000.00	100	1993	1993	3	100	2,000	
4	0104	GENERATOR	0	100	0	0	1.00	UT	6,000.00	6,000.00	100	2025	2024		90	5,400	

LAND DESCRIPTION

TOTAL OB/XF 10,456

LN	USE CODE	CLS	LAND USE DESCRIPTION	CAP	RD	LOC ZONE	FRONT	DEPTH	TOT LND UTS	UNIT TYPE	DT	DPTH FACT	% COND	TOT ADJ	UNIT PRICE	ADJ UNIT PRICE	LAND VALUE	OTHER ADJUSTMENTS AND NOTES	YEAR	DENSITY	DECL	FRZ	YR	CONSRV
1	0100	C	SFR	100		RSF-1	0.00	0.00	1.00	LT		1.00	1.00	1.00	35,000.00	35,000.00	35,000							

REVIEW DATE 04/08/2025 BY KS Total Acres: 0.54 Total Land Value: 35,000 Market: 0 Agricultural: 0 Common: 35,000 PRINTED 11/17/2025 BY SYS