SE1/4 OF SW1/4 EX S 610.52 FT,
EX E 759.98 FT & W 513.46 FT
OF NE1/4 OF SW1/4 LYING S OF

GEISLER NICHOLAS P
1758 NW BROWN RD
LAKE CITY, FL 32055

2026

21-3S-16-02237-001

COLUMBIA COUNTY PROPERTY

BUILDING CHARACTERISTICS

ELEMENT	CD	CONSTRUCTION
Exterior Wall	12	CEDAR 100
Roof Structur	03	GABLE/HIP 100
Roof Cover	03	COMP SHNGL 100
Interior Wall	05	DRYWALL 100
Interior Floo	14	CARPET 80
Interior Floo	15	HARDTILE 20
Air Condition	03	CENTRAL 100
Heating Type	04	AIR DUCTED 100
Bedrooms		3 100
Bathrooms		2 100
Frame	01	NONE 100
Stories	1.	1. 100
Architectual	05	CONV 100
Units		0 100
Condition Adj	03	03 100
Kitchen Adjus	01	01 100
Quality	06	06
DOR CODE	0100	SINGLE FAMILY
MAP NUM		MKT AREA 01
NEIGHBORHOOD/LOC	21316.00	1.00/

AREA TYPE	TOTAL GROSS AREA	PCT OF BASE	YEAR	TOT ADJ AREA	SUBAREA MARKET VALUE
BAS	1,860	100		1,860	177,653
FDC	580	35		203	19,389
FOP	80	30		24	2,292
FOP	230	30		69	6,590
UEP	200	60		120	11,462
UOP	928	20		186	17,765
UST	60	45		27	2,579
TOTALS	3,938			2,489	237,730

MARKET ADJUSTMENTS

TYPE	MDL	EFF. AREA	TOT ADJ PTS	EFF. BASE RATE	REPL. COST NEW	AYB	EYB	ECON	FNCT		NORM	% COND
0100	01	2,489	113.7024	127.35	316,974	1990	2000	0	0	0	25.00	75.00

1 SINGLE FAM 100% - 2002 Heated Area: 1860 HX Base Yr 2002

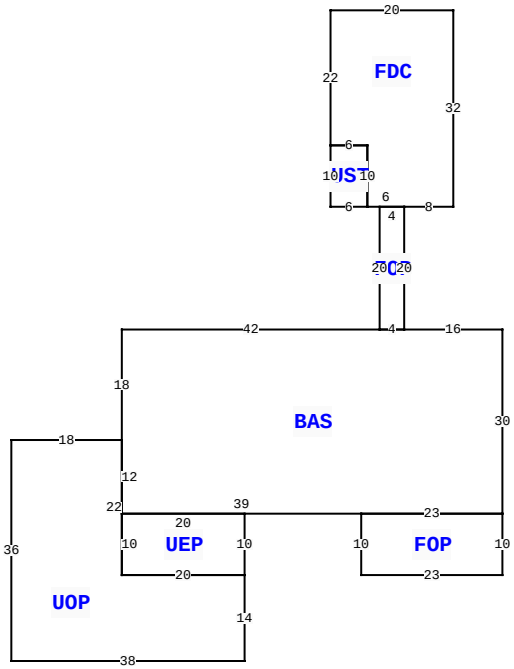

1758 NW BROWN RD, LAKE CITY

BLD DATE		LGL DATE	
XF DATE		LAND DATE	04/07/2025 MLU
INC DATE		AG DATE	

VALUATION SUMMARY

VALUATION BY		STANDARD
Tax Group: 2	Tax Dist:	
BUILDING MARKET VALUE		237,730
TOTAL MARKET OB/XF VALUE		15,200
TOTAL LAND VALUE - MARKET		90,900
TOTAL MARKET VALUE		343,830
SOH/AGL Deduction		90,159
ASSESSED VALUE		253,671
TOTAL EXEMPTION VALUE	HX HB	50,722
BASE TAXABLE VALUE		202,949
TOTAL JUST VALUE		343,830
NCON VALUE		0
INCOME VALUE		
PREVIOUS YEAR MKT VALUE		347,000

SALE:1:1: 10.10 AC. (MKT. 2200 @ AC)

PERMIT NUM	DESCRIPTION	AMT	ISSUED
14353	M H	125	08/03/1998

SALES DATA

OFF RECORD Number	DATE	TYPE INST	Q U	V I	RSN CD	SALE PRICE
1211/2229	3/17/2011	QC	U	I	11	100
GRANTOR: NICHOLAS & VIANNA GEI						
GRANTEE: NICHOLAS GEISLER						
0911/0667	9/22/2000	WD	Q	I		186,000
GRANTOR: LINDA P WOOD						
GRANTEE: NICHOLAS & VIANNA G						

BUILDING NOTES

BUILDING DIMENSIONS

BAS= W42 S18 UOP= W18 S36 E38 N14 W20 N22$ S12 UEP= S10 E20 N10 W20$ E39 FOP= S10E23 N10 W23$ E23 N30 W16 FOP= N20 FDC= E8 N32 W20 S22 UST= S10 E6 N10 W6$ E6 S10 E6$ W4 S20 E4$ W4$.

EXTRA FEATURES

LN	OB/XF CODE	DESCRIPTION	BLD	CAP	L	W	UNITS	UT	Adj R	ADJ UNIT PRICE	ORIG COND	YEAR ON	YEAR ACTUAL	Q	% COND	OB/XF MKT VALUE	NOTES
1	0040	BARN,POLE	0	100	0	0	1.00	UT	0.00	0.00	100	1998	1998	3	100	5,000	
2	0070	CARPORT UF	0	100	0	0	1.00	UT	0.00	0.00	100	1998	1998	3	100	5,000	
3	0190	FPLC PF	0	100	0	0	1.00	UT	1,200.00	1,200.00	100	0	0	3	100	1,200	
4	0169	FENCE/WOOD	0	100	0	0	1.00	UT	0.00	0.00	100	2008	2008	3	100	800	
5	0296	SHED METAL	0	100	0	0	1.00	UT	1,200.00	1,200.00	100	2023	2022		100	1,200	
6	0296	SHED METAL	0	100	0	0	1.00	UT	2,000.00	2,000.00	100	2023	2022		100	2,000	

LAND DESCRIPTION

TOTAL OB/XF 15,200

LN	USE CODE	CLS	LAND USE DESCRIPTION	CAP	RD	LOC ZONE	FRONT	DEPTH	TOT LND UTS	UNIT TYPE	DT	DPTH FACT	% COND	TOT ADJ	UNIT PRICE	ADJ UNIT PRICE	LAND VALUE	OTHER ADJUSTMENTS AND NOTES	YEAR	DENSITY	DECL	FRZ	YR	CONSRV
1	0100	C	SFR	100		A-1	0.00	0.00	10.10	AC		1.00	1.00	1.00	9,000.00	9,000.00	90,900							

REVIEW DATE 02/09/2023 BY KS Total Acres: 10.10 Total Land Value: 90,900 Market: 0 Agricultural: 0 Common: 90,900 PRINTED 11/12/2025 BY SYS