COMM SW COR OF NW1/4 OF NW1/4,
RUN E 138.54 FT TO E R/W OF
RD FOR POB, CONT E 658.86 FT,

NYDAM NEAL R/NYDAM NANCY K
545 NW BERT AVE
LAKE CITY, FL 32055-5149

2026

21-3S-16-02211-005

COLUMBIA COUNTY PROPERTY

BUILDING CHARACTERISTICS

ELEMENT	CD	CONSTRUCTION
Exterior Wall	19	COMMON BRK 100
Roof Structur	03	GABLE/HIP 100
Roof Cover	03	COMP SHNGL 100
Interior Wall	05	DRYWALL 100
Interior Floo	14	CARPET 70
Interior Floo	12	HARDWOOD 30
Air Condition	03	CENTRAL 100
Heating Type	04	AIR DUCTED 100
Bedrooms		3 100
Bathrooms		2.5 100
Frame	02	WOOD FRAME 100
Stories	2.	2. 100
Architectual	05	CONV 100
Units		0 100
Condition Adj	03	03 100
Kitchen Adjus	01	01 100
Quality	05	05
DOR CODE	0100	SINGLE FAMILY
MAP NUM		MKT AREA 01
NEIGHBORHOOD/LOC	21316.00	1.00/

AREA TYPE	TOTAL GROSS AREA	PCT OF BASE	YEAR	TOT ADJ AREA	SUBAREA MARKET VALUE
APT	806	100		806	78,805
BAS	1,804	100		1,804	176,382
FSP	490	40		196	19,164
FSP	1,104	40		442	43,216
SFB	652	80		522	51,038
UST	84	45		38	3,715
UST	84	45		38	3,715
UST	312	45		140	13,688
TOTALS	5,336			3,986	389,723

MARKET ADJUSTMENTS

TYPE	MDL	EFF. AREA	TOT ADJ PTS	EFF. BASE RATE	REPL. COST NEW	AYB	EYB	ECON	FNCT		NORM	% COND
0100	01	3,986	111.9195	125.35	499,645	2003	2003	0	0	0	22.00	78.00

1 SINGLE FAM 100% - 2004 Heated Area: 3262 HX Base Yr 2004

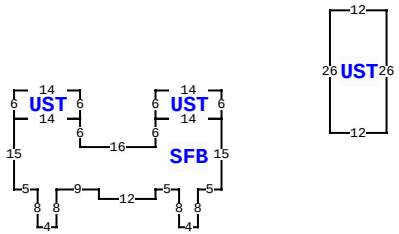

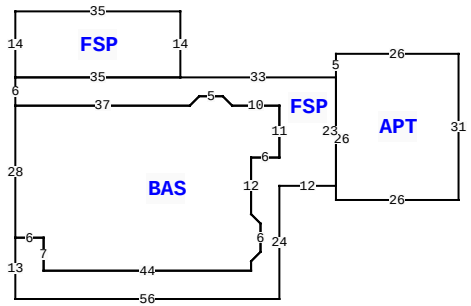

545 NW BERT AVE, LAKE CITY

BLD DATE		LGL DATE	
XF DATE		LAND DATE	04/07/2025 MLU
INC DATE		AG DATE	

VALUATION SUMMARY

VALUATION BY		STANDARD
Tax Group: 2	Tax Dist:	
BUILDING MARKET VALUE		389,723
TOTAL MARKET OB/XF VALUE		49,885
TOTAL LAND VALUE - MARKET		74,790
TOTAL MARKET VALUE		514,398
SOH/AGL Deduction		157,814
ASSESSED VALUE		356,584
TOTAL EXEMPTION VALUE	HX HB	50,722
BASE TAXABLE VALUE		305,862
TOTAL JUST VALUE		514,398
NCON VALUE		0
INCOME VALUE		
PREVIOUS YEAR MKT VALUE		519,395

PERMIT NUM	DESCRIPTION	AMT	ISSUED
000052813	Roof Replacement	24,500	04/03/2025
000051258	Generator	0	10/25/2024
20043	SFR	420	10/15/2002

SALES DATA

OFF RECORD Number	DATE	TYPE INST	Q / U	V / I	RSN CD	SALE PRICE
0960/3654	8/23/2002	WD	Q	V		30,000

GRANTOR: DANIEL & PAULA OWENS

GRANTEE: NEAL & NANCY NYDAM

BUILDING NOTES

BUILDING DIMENSIONS

APT= W26 S5 FSP= W33 FSP= N14 W35 S14 E35$ W35 S6 BAS= S28 E6 S7 E44 N2 U2 R2 N6 L2 U2 N12 E6 N11 W10 L2 U2 W5 D2 L2 W37$ E37 R2 U2 E5 D2 R2 E10 S11 W6 S12 D2 R2 S6 L2 D2 S2 W44 N7 W6 S13 E56 N24 E12 N23$ S26E26 N31$ PTR= N60 UST= N26 W12 S26 E12$ S60$ PTR= N40 W40 SFB= N8 E5 N15 UST= N6 W14 S6 E14$ W14 S6 W16 N6 UST= N6 W14 S6 E14$ W14 S15E5 S8 E4 N8 E9 S2 E12 N2 E5 S8E4 $ E40 S40$.

EXTRA FEATURES

LN	OB/XF CODE	DESCRIPTION	BLD	CAP	L	W	UNITS	UT	Adj R	ADJ UNIT PRICE	ORIG COND	YEAR ON	YEAR ACTUAL	Q	% COND	OB/XF MKT VALUE	NOTES
1	0166	CONC,PAVMT	0	100	26	35	910.00	UT	2.00	2.00	100	2003	2003	3	100	1,820	
2	0031	BARN,MT AE	0	100	80	55	1.00	UT	0.00	0.00	100	2003	2003	3	100	25,000	
3	0294	SHED WOOD/	0	100	12	20	1.00	UT	0.00	0.00	100	2008	2008	3	100	2,500	
4	0120	CLFENCE 4	0	100	0	0	120.00	UT	7.50	7.50	100	2008	2008	3	100	900	
5	0260	PAVEMENT-A	0	100	10	650	6,500.00	UT	0.75	0.75	100	0	0	3	100	4,875	
6	0296	SHED METAL	0	100	12	20	240.00	UT	6.00	6.00	100	2008	2008	3	100	1,440	
7	0210	GARAGE U	0	100	35	25	1.00	UT	5,000.00	5,000.00	75	2008	2008	3	75	3,750	
8	0070	CARPORT UF	0	100	0	0	1.00	UT	0.00	0.00	100	2014	2014	3	100	1,000	
9	0296	SHED METAL	0	100	0	0	1.00	UT	0.00	0.00	100	2014	2014	3	100	100	
10	0294	SHED WOOD/	0	100	0	0	1.00	UT	0.00	0.00	100	2018	2018	3	100	8,500	

LAND DESCRIPTION

TOTAL OB/XF 49,885

LN	USE CODE	CLS	LAND USE DESCRIPTION	CAP	RD	LOC ZONE	FRONT	DEPTH	TOT LND UTS	UNIT TYPE	DT	DPTH FACT	% COND	TOT ADJ	UNIT PRICE	ADJ UNIT PRICE	LAND VALUE	OTHER ADJUSTMENTS AND NOTES	YEAR	DENSITY	DECL	FRZ	YR	CONSRV
1	0100	C	SFR	100		A-1	0.00	0.00	5.01	AC		1.00	1.00	1.00	9,000.00	9,000.00	45,090							
2	0000	C	VAC RES	100			0.00	0.00	3.30	AC		1.00	1.00	1.00	9,000.00	9,000.00	29,700							

REVIEW DATE 05/05/2025 BY chuck Total Acres: 8.31 Total Land Value: 74,790 Market: 0 Agricultural: 0 Common: 74,790 PRINTED 11/19/2025 BY SYS