SE1/4 OF NE1/4 OF SEC 20 &
THAT PART OF SW1/4 OF NW 1/4
OF SEC 21 AS LIES WEST OF SW

TILLMAN CARIDAD T
1080 SW CARL WILSON RD
FT WHITE, FL 32038

2026

20-6S-17-09707-000

COLUMBIA COUNTY PROPERTY

BUILDING CHARACTERISTICS

ELEMENT	CD	CONSTRUCTION
Exterior Wall	19	COMMON BRK 100
Roof Structur	08	IRREGULAR 100
Roof Cover	14	PREFIN MT 100
Interior Wall	05	DRYWALL 100
Interior Floo	14	CARPET 80
Interior Floo	15	HARDTILE 20
Air Condition	03	CENTRAL 100
Heating Type	04	AIR DUCTED 100
Bedrooms		3 100
Bathrooms		2.5 100
Frame	02	WOOD FRAME 100
Stories	2.	2. 100
Architectual	05	CONV 100
Units		0 100
Quality	07	07
DOR CODE	5000	IMPROVED AG
MAP NUM		MKT AREA 02
NEIGHBORHOOD/LOC	20617.00	1.00/

AREA TYPE	TOTAL GROSS AREA	PCT OF BASE	YEAR	TOT ADJ AREA	SUBAREA MARKET VALUE
BAS	1,928	100		1,928	250,598
FGR	675	55		371	48,222
FOP	1,820	30		546	70,968
FUS	694	100		694	90,204
TOTALS	5,117			3,539	459,992

MARKET ADJUSTMENTS

TYPE	MDL	EFF. AREA	TOT ADJ PTS	EFF. BASE RATE	REPL. COST NEW	AYB	EYB	ECON	FNCT		NORM	% COND
0100	01	3,539	139.8197	156.60	554,207	2008	2008	0	0	0	17.00	83.00

1 SINGLE FAM 100% - 2009 Heated Area: 2622 HX Base Yr 2009

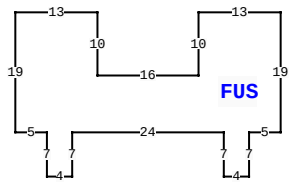

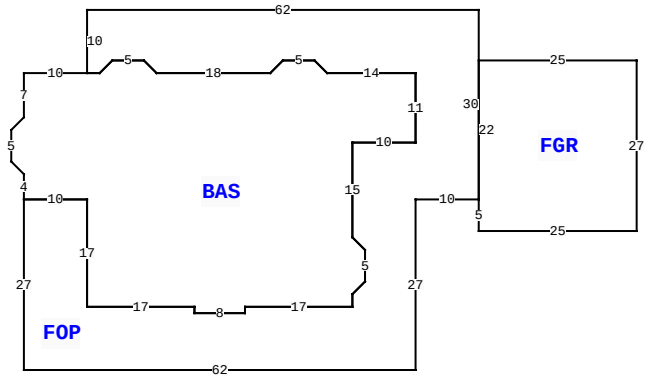

1080 SW CARL WILSON RD, FORT WHITE

BLD DATE		LGL DATE	
XF DATE		LAND DATE	04/10/2025 MLU
INC DATE		AG DATE	

VALUATION SUMMARY

VALUATION BY		STANDARD
Tax Group: 3	Tax Dist:	
BUILDING MARKET VALUE		459,992
TOTAL MARKET OB/XF VALUE		21,300
TOTAL LAND VALUE - MARKET		261,000
TOTAL MARKET VALUE		501,809
SOH/AGL Deduction		150,213
ASSESSED VALUE		351,596
TOTAL EXEMPTION VALUE	98 HX HB	351,596
BASE TAXABLE VALUE		0
TOTAL JUST VALUE		742,292
NCON VALUE		0
INCOME VALUE		
PREVIOUS YEAR MKT VALUE		747,834

PERMIT NUM	DESCRIPTION	AMT	ISSUED
25477	SFR	763	01/29/2007

SALES DATA

OFF RECORD Number	DATE	TYPE INST	Q U /	V I /	RSN CD	SALE PRICE
1302/1590	10/14/2015	LE	U	I	14	100
GRANTOR: CARIDAD T TILLMAN (UN						
GRANTEE: CARIDAD T TILLMAN (						
1301/2475	9/30/2015	LE	U	I	14	100
GRANTOR: CARIDAD T TILLMAN (UN						
GRANTEE: CARIDAD T TILLMAN (						

BUILDING NOTES

BUILDING DIMENSIONS

BAS= W10 S7 D2 L2 S5 R2 D2 S4 FOP= S27 E62 N27 E10 FGR= S5 E25 N27 W25 S22$ N30 W62 S10 E2 R2 U2 E5 D2 R2 E18 R2 U2 E5 D2 R2 E14 S11 W10 S15 D2 R2 S5 L2 D2 S2 W17 S1 W8 N1 W17 N17 W10$ E10 S17 E17 S1 E8 N1 E17 N2 U2 R2 N5 L2 U2 N15 E10 N11 W14 L2 U2 W5 D2 L2 W18 L2 U2 W5 D2 L2 W2$ PTR= N30 FUS= N7 E5 N19 W13 S10 W16 N10 W13 S19 E5 S7 E4 N7 E24 S7 E4$ S30$.

EXTRA FEATURES

LN	OB/XF CODE	DESCRIPTION	BLD	CAP	L	W	UNITS	UT	Adj R	ADJ UNIT PRICE	ORIG COND	YEAR ON	YEAR ACTUAL	Q	% COND	OB/XF MKT VALUE	NOTES
1	0180	FPLC 1STRY	0	100	0	0	1.00	UT	2,000.00	2,000.00	100	2008	2008	3	100	2,000	
2	0166	CONC,PAVMT	0	100	22	35	770.00	UT	3.00	3.00	100	2008	2008	3	100	2,310	
3	0070	CARPORT UF	0	100	0	0	1.00	UT	0.00	0.00	100	2013	2013	3	100	500	
4	0060	CARPORT F	0	100	0	0	1.00	UT	0.00	0.00	100	2013	2013	3	100	600	
5	0031	BARN,MT AE	0	100	30	48	1,440.00	UT	11.00	11.00	100	2013	2013	3	100	15,840	
6	0285	SALVAGE	0	100	0	0	1.00	UT	0.00	0.00	100	2013	2013	3	100	50	

LAND DESCRIPTION

TOTAL OB/XF 21,300

LN	USE CODE	CLS	LAND USE DESCRIPTION	CAP	RD	LOC ZONE	FRONT	DEPTH	TOT LND UTS	UNIT TYPE	DT	DPTH FACT	% COND	TOT ADJ	UNIT PRICE	ADJ UNIT PRICE	LAND VALUE	OTHER ADJUSTMENTS AND NOTES	YEAR	DENSITY	DECL	FRZ	YR	CONSRV
1	0100	C	SFR	100			0.00	0.00	1.00	AC		1.00	1.00	1.00	4,500.00	4,500.00	4,500							
2	5600	A	TIMBER 3	0		A-1	0.00	0.00	57.00	AC		1.00	1.00	1.00	281.00	281.00	16,017							
3	9910	M	MKT.VAL.AG	0		A-1	0.00	0.00	57.00	AC		1.00	1.00	1.00	4,500.00	4,500.00	256,500							

REVIEW DATE 10/24/2017 BY BC Total Acres: 58.00 Total Land Value: 20,517 Market: 256,500 Agricultural: 16,017 Common: 4,500 PRINTED 10/03/2025 BY SYS