E1/2 OF NE1/4 OF SE1/4.

805-1247, WD 1332-2227,

BELL RALPH LOUIS/BELL MARY MAGDELENE
424 SW PACKARD ST
LAKE CITY, FL 32025

2026

20-4S-17-08623-000

COLUMBIA COUNTY PROPERTY

BUILDING CHARACTERISTICS

ELEMENT	CD	CONSTRUCTION
Exterior Wall	19	COMMON BRK 50
Exterior Wall	31	VINYL SID 50
Roof Structur	03	GABLE/HIP 100
Roof Cover	03	COMP SHNGL 100
Interior Wall	05	DRYWALL 100
Interior Floo	14	CARPET 60
Interior Floo	08	SHT VINYL 40
Air Condition	03	CENTRAL 100
Heating Type	04	AIR DUCTED 100
Bedrooms		4 100
Bathrooms		3 100
Frame	02	WOOD FRAME 100
Stories	1.	1. 100
Architectual	05	CONV 100
Units		0 100
Condition Adj	03	03 100
Kitchen Adjus	01	01 100
Quality	05	05
DOR CODE	5000	IMPROVED AG
MAP NUM		MKT AREA 02
NEIGHBORHOOD/LOC	20417.00	1.00/

AREA TYPE	TOTAL GROSS AREA	PCT OF BASE	YEAR	TOT ADJ AREA	SUBAREA MARKET VALUE
BAS	2,629	100		2,629	230,235
FGR	864	55		475	41,598
FHS	1,392	60		835	73,125
FOP	276	30		83	7,269
FOP	480	30		144	12,611
TOTALS	5,641			4,166	364,837

MARKET ADJUSTMENTS

TYPE	MDL	EFF. AREA	TOT ADJ PTS	EFF. BASE RATE	REPL. COST NEW	AYB	EYB	ECON	FNCT		NORM	% COND
0100	01	4,166	100.8900	113.00	470,758	2005	2005	0	0	0	22.50	77.50

1 SINGLE FAM 100% - 2006 Heated Area: 4021 HX Base Yr 2006

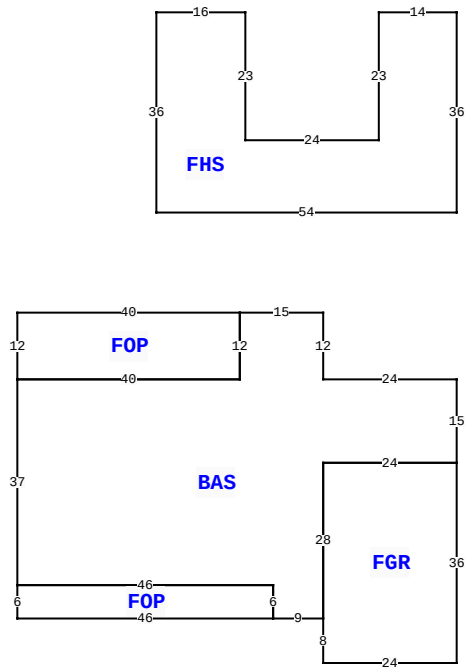

424 SW PACKARD ST, LAKE CITY

BLD DATE		LGL DATE	
XF DATE		LAND DATE	04/08/2025 MLU
INC DATE		AG DATE	

VALUATION SUMMARY

VALUATION BY		STANDARD
Tax Group: 2	Tax Dist:	
BUILDING MARKET VALUE		364,837
TOTAL MARKET OB/XF VALUE		5,268
TOTAL LAND VALUE - MARKET		120,000
TOTAL MARKET VALUE		381,425
SOH/AGL Deduction		128,420
ASSESSED VALUE		253,005
TOTAL EXEMPTION VALUE	HX HB	50,722
BASE TAXABLE VALUE		202,283
TOTAL JUST VALUE		490,105
NCON VALUE		0
INCOME VALUE		
PREVIOUS YEAR MKT VALUE		495,378

PERMIT NUM	DESCRIPTION	AMT	ISSUED
22532	SFR	1,105	11/23/2004
22062	TR/TRAILER	150	07/09/2004

SALES DATA

OFF RECORD Number	DATE	TYPE INST	Q U	V I	RSN CD	SALE PRICE
1332/2227	3/14/2017	WD	U	I	11	100

GRANTOR: RALPH LOUIS & MARY MA

GRANTEE: RALPH LOUIS & MARY

BUILDING NOTES

BUILDING DIMENSIONS

BAS= W24 N12 W15 FOP= W40 S12 E40 N12$ S12 W40 S37 FOP= S6 E46 N6 W46$ E46 S6 E9 FGR= S8 E24 N36 W24 S28$ N28 E24 N15$ PTR= N30 FHS= N36 W14 S23 W24 N23 W16 S36 E54$ S30$.

EXTRA FEATURES

LN	OB/XF CODE	DESCRIPTION	BLD	CAP	L	W	UNITS	UT	Adj R	ADJ UNIT PRICE	ORIG COND	YEAR ON	YEAR ACTUAL	Q	% COND	OB/XF MKT VALUE	NOTES
1	0180	FPLC 1STRY	0	100	0	0	2.00	UT	2,000.00	2,000.00	100	2005	2005	3	100	4,000	
2	0166	CONC,PAVMT	0	100	0	0	868.00	UT	2.00	2.00	50	2005	2005	3	50	868	
3	0294	SHED WOOD/	0	100	0	0	1.00	UT	0.00	0.00	100	2017	2017	3	100	400	

LAND DESCRIPTION

TOTAL OB/XF 5,268

LN	USE CODE	CLS	LAND USE DESCRIPTION	CAP	RD	LOC ZONE	FRONT	DEPTH	TOT LND UTS	UNIT TYPE	DT	DPTH FACT	% COND	TOT ADJ	UNIT PRICE	ADJ UNIT PRICE	LAND VALUE	OTHER ADJUSTMENTS AND NOTES	YEAR	DENSITY	DECL	FRZ	YR	CONSRV
1	0100	C	SFR	100			0.00	0.00	1.00	AC		1.00	1.00	1.00	6,000.00	6,000.00	6,000							
2	6200	A	PASTURE 3	0		A-1	0.00	0.00	19.00	AC		1.00	1.00	1.00	280.00	280.00	5,320							
3	9910	M	MKT.VAL.AG	0		A-1	0.00	0.00	19.00	AC		1.00	1.00	1.00	6,000.00	6,000.00	114,000							

REVIEW DATE 05/19/2017 BY BC Total Acres: 20.00 Total Land Value: 11,320 Market: 114,000 Agricultural: 5,320 Common: 6,000 PRINTED 11/10/2025 BY SYS