LOTS 5 THRU 13 BLOCK E SPRINGFIE
WD 1141-2505, DC 1346-252, WD 13

NORRIS THERESA D/FLAKE CHARLES R
P O BOX 683
LAKE CITY, FL 32056

2026

20-3S-17-05414-000

COLUMBIA COUNTY PROPERTY

BUILDING CHARACTERISTICS

ELEMENT	CD	CONSTRUCTION
Exterior Wall	05	AVERAGE 100
Roof Structur	03	GABLE/HIP 100
Roof Cover	03	COMP SHNGL 100
Interior Wall	05	DRYWALL 100
Interior Floo	14	CARPET 90
Interior Floo	06	VINYL ASB 10
Air Condition	02	WINDOW 100
Heating Type	02	CONVECTION 100
Bedrooms		3 100
Bathrooms		1 100
Frame	01	NONE 100
Stories	1.	1. 100
Architectual	05	CONV 100
Units		0 100
Condition Adj	03	03 100
Kitchen Adjus	01	01 100
Quality	05	05
DOR CODE	0100	SINGLE FAMILY
MAP NUM		MKT AREA 07
NEIGHBORHOOD/LOC	20317.070	1.00/

AREA TYPE	TOTAL GROSS AREA	PCT OF BASE	YEAR	TOT ADJ AREA	SUBAREA MARKET VALUE
BAS	1,218	100		1,218	88,069
UCP	216	20		43	3,109
TOTALS	1,434			1,261	91,178

MARKET ADJUSTMENTS

TYPE	MDL	EFF. AREA	TOT ADJ PTS	EFF. BASE RATE	REPL. COST NEW	AYB	EYB	ECON	FNCT		NORM	% COND
0100	01	1,261	99.3200	111.24	140,274	1940	1940	0	0	0	35.00	65.00

1 SINGLE FAM 100% - 2022 Heated Area: 1218 HX Base Yr 2022

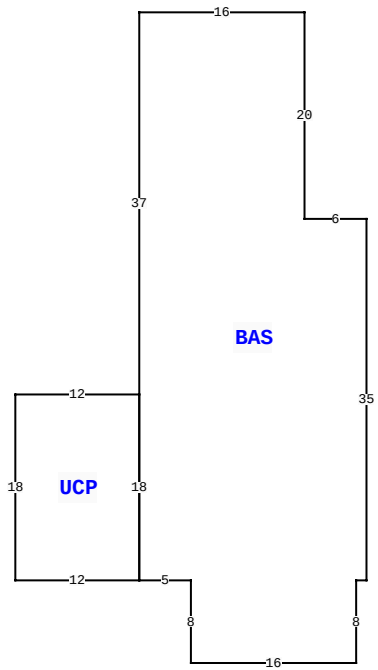

183 NW QUINTEN ST, LAKE CITY

BLD DATE		LGL DATE	
XF DATE		LAND DATE	
INC DATE		AG DATE	

VALUATION SUMMARY

VALUATION BY		STANDARD
Tax Group: 2	Tax Dist:	
BUILDING MARKET VALUE		91,178
TOTAL MARKET OB/XF VALUE		950
TOTAL LAND VALUE - MARKET		5,663
TOTAL MARKET VALUE		97,791
SOH/AGL Deduction		72,784
ASSESSED VALUE		25,007
TOTAL EXEMPTION VALUE	HX HB	25,000
BASE TAXABLE VALUE		7
TOTAL JUST VALUE		97,791
NCON VALUE		0
INCOME VALUE		
PREVIOUS YEAR MKT VALUE		97,791

PERMIT NUM	DESCRIPTION	AMT	ISSUED

SALES DATA

OFF RECORD Number	DATE	TYPE INST	Q U	V I	RSN CD	SALE PRICE
1475/2324	9/20/2022	QC	U	I	11	100
GRANTOR: NORRIS THERESA D						
GRANTEE: NORRIS THERESA D						
1346/1215	10/18/2017	WD	U	I	11	100
GRANTOR: RONNIE W NORRIS						
GRANTEE: RONNIE W & THERESA						

BUILDING NOTES

BUILDING DIMENSIONS

BAS= W6 N20 W16 S37 UCP= W12S18 E12 N18$ S18 E5 S8 E16 N8 E1 N35$.

EXTRA FEATURES

LN	OB/XF CODE	DESCRIPTION	BLD	CAP	L	W	UNITS	UT	Adj R	ADJ UNIT PRICE	ORIG COND	YEAR ON	YEAR ACTUAL	Q	% COND	OB/XF MKT VALUE	NOTES
1	0296	SHED METAL	0	100	0	0	1.00	UT	800.00	800.00	50	0	0	3	50	400	
2	0296	SHED METAL	0	100	0	0	1.00	UT	0.00	0.00	100	2011	2011	3	100	100	
3	0296	SHED METAL	0	100	0	0	1.00	UT	0.00	0.00	100	2011	2011	3	100	200	
4	0166	CONC,PAVMT	0	100	0	0	1.00	UT	0.00	0.00	100	2011	2011	3	100	50	
5	0080	DECKING	0	100	0	0	1.00	UT	0.00	0.00	100	2011	2011	3	100	200	

LAND DESCRIPTION

TOTAL OB/XF 950

LN	USE CODE	CLS	LAND USE DESCRIPTION	CAP	RD	LOC ZONE	FRONT	DEPTH	TOT LND UTS	UNIT TYPE	DT	DPTH FACT	% COND	TOT ADJ	UNIT PRICE	ADJ UNIT PRICE	LAND VALUE	OTHER ADJUSTMENTS AND NOTES	YEAR	DENSITY	DECL	FRZ	YR	CONSRV
1	0100	C	SFR	100			0.00	0.00	22,651.00	SF		1.00	1.00	1.00	0.25	0.25	5,663							

REVIEW DATE 09/01/2015 BY DF Total Acres: 0.52 Total Land Value: 5,663 Market: 0 Agricultural: 0 Common: 5,663 PRINTED 11/07/2025 BY SYS