COMM SE COR OF SEC, RUN N 473.69
A PT IN A FENCE LINE FOR POB, RU
ALONG FENCE LINE 466.39 FT, N 65

DIAZ JESUS ANTONIO/DIAZ PETRA MERCEDES
366 NW CELTIC CT
LAKE CITY, FL 32055

2026

20-3S-16-02207-101

COLUMBIA COUNTY PROPERTY

BUILDING CHARACTERISTICS

ELEMENT	CD	CONSTRUCTION
Exterior Wall	16	WD FR STUC 100
Roof Structur	03	GABLE/HIP 100
Roof Cover	03	COMP SHNGL 100
Interior Wall	05	DRYWALL 100
Interior Floo	14	CARPET 80
Interior Floo	06	VINYL ASB 20
Air Condition	03	CENTRAL 100
Heating Type	03	FORCED AIR 100
Bedrooms		3 100
Bathrooms		3.5 100
Frame	01	NONE 100
Stories	2.	2. 100
Architectual	05	CONV 100
Units		0 100
Condition Adj	03	03 100
Kitchen Adjus	01	01 100
Quality	06	06

DOR CODE 0100 SINGLE FAMILY
MAP NUM | MKT AREA 01
NEIGHBORHOOD/LOC 20316.00 1.00/

AREA TYPE	TOTAL GROSS AREA	PCT OF BASE	YEAR	TOT ADJ AREA	SUBAREA MARKET VALUE
BAS	1,714	100		1,714	145,457
FGR	576	55		317	26,902
FOP	48	30		14	1,188
FOP	64	30		19	1,613
FUS	1,322	100		1,322	112,190
UOP	48	20		10	849
TOTALS	3,772			3,396	288,198

MARKET ADJUSTMENTS

TYPE	MDL	EFF. AREA	TOT ADJ PTS	EFF. BASE RATE	REPL. COST NEW	AYB	EYB	ECON	FNCT		NORM	% COND
0100	01	3,396	116.5673	130.56	443,382	1987	1987	0	0	0	35.00	65.00

1 SINGLE FAM 100% - 0 Heated Area: 3036 HX Base Yr

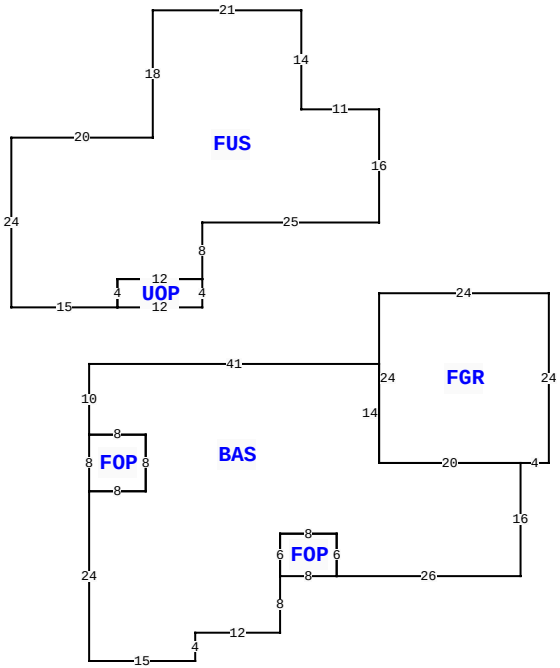

366 NW CELTIC CT, LAKE CITY

BLD DATE		LGL DATE	
XF DATE		LAND DATE	04/07/2025 MLU
INC DATE		AG DATE	

VALUATION SUMMARY

VALUATION BY		STANDARD
Tax Group: 3	Tax Dist:	
BUILDING MARKET VALUE		288,198
TOTAL MARKET OB/XF VALUE		3,350
TOTAL LAND VALUE - MARKET		63,000
TOTAL MARKET VALUE		354,548
SOH/AGL Deduction		156,585
ASSESSED VALUE		197,963
TOTAL EXEMPTION VALUE	HX HB SX	100,722
BASE TAXABLE VALUE		97,241
TOTAL JUST VALUE		354,548
NCON VALUE		0
INCOME VALUE		
PREVIOUS YEAR MKT VALUE		354,548

PERMIT NUM	DESCRIPTION	AMT	ISSUED
000049376	Roof Replacement	21,000	03/06/2024
34111	RECONNECT	75	06/03/2016

SALES DATA

OFF RECORD Number	DATE	TYPE INST	Q U	V I	RSN CD	SALE PRICE
0784/1544	12/30/1993	WD	Q	I		146,500
GRANTOR: O P DAUGHTRY III						
GRANTEE: JESUS ANTONIO DIAZ						
0631/0709	9/01/1987	WD	U	V		7,500
GRANTOR: DDP CORPORATION						
GRANTEE: DAUGHTRY PALMER &						

BUILDING NOTES

BUILDING DIMENSIONS

BAS= W41 S10 FOP= S8 E8 N8 W8$ E8 S8 W8 S24 E15 N4 E12 N8FOP= E8 N6 W8 S6$ N6 E8 S6 E26 N16 FGR= E4 N24 W24 S24 E20$ W20 N14$ PTR=N20 FUS= N16 W11 N14 W21 S18 W20 S24 E15 UOP= E12 N4 W12 S4$ N4 E12 N8 E25$ S20$.

EXTRA FEATURES

LN	OB/XF CODE	DESCRIPTION	BLD	CAP	L	W	UNITS	UT	Adj R	ADJ UNIT PRICE	ORIG COND	YEAR ON	YEAR ACTUAL	Q	% COND	OB/XF MKT VALUE	NOTES
1	0170	FPLC 2STRY	0	100	0	0	1.00	UT	2,750.00	2,750.00	100	2005	2005	3	100	2,750	
2	0166	CONC,PAVMT	0	100	0	0	1.00	UT	0.00	0.00	100	2005	2005	3	100	600	

LAND DESCRIPTION

TOTAL OB/XF 3,350

LN	USE CODE	CLS	LAND USE DESCRIPTION	CAP	RD	LOC ZONE	FRONT	DEPTH	TOT LND UTS	UNIT TYPE	DT	DPTH FACT	% COND	TOT ADJ	UNIT PRICE	ADJ UNIT PRICE	LAND VALUE	OTHER ADJUSTMENTS AND NOTES	YEAR	DENSITY	DECL	FRZ	YR	CONSRV
1	0100	C	SFR	100		A-1	0.00	0.00	7.00	AC		1.00	1.00	1.00	9,000.00	9,000.00	63,000							

REVIEW DATE 04/02/2024 BY JS Total Acres: 7.00 Total Land Value: 63,000 Market: 0 Agricultural: 0 Common: 63,000 PRINTED 11/18/2025 BY SYS