LOT 19 HIGH POINTE S/D & PART OF
POINTE S/D DESC AS: BEG SE COR O
DEG W 1100.52 FT TO SW COR OF SA

CALIENDO MICHAEL P/THOMSON JAMES W
260 NW WHITTON CT
LAKE CITY, FL 32055

2026

20-3S-16-02202-119

COLUMBIA COUNTY PROPERTY

BUILDING CHARACTERISTICS

ELEMENT	CD	CONSTRUCTION
Exterior Wall	32	HARDIE BRD 100
Exterior Wall	00	N/A 0
Roof Structur	08	IRREGULAR 100
Roof Cover	03	COMP SHNGL 100
Interior Wall	05	DRYWALL 100
Interior Floo	13	LAM/VNLPLK 100
Interior Floo	00	N/A 0
Air Condition	03	CENTRAL 100
Heating Type	04	AIR DUCTED 100
Bedrooms		3 100
Bathrooms		2.5 100
Frame	02	WOOD FRAME 100
Stories	1.5	1.5 100
Units		0 100
Condition Adj	03	03 100
Kitchen Adjus	01	01 100
Quality	07	07
DOR CODE	0100	SINGLE FAMILY
MAP NUM		MKT AREA 01
NEIGHBORHOOD/LOC	20316.00	1.00/

AREA TYPE	TOTAL GROSS AREA	PCT OF BASE	YEAR	TOT ADJ AREA	SUBAREA MARKET VALUE
BAS	2,589	100		2,589	346,172
FGR	696	55		383	51,210
FOP	45	30		14	1,872
FOP	422	30		127	16,981
FUS	364	100		364	48,670
UDG	728	55	2025	400	53,484
TOTALS	4,844			3,877	518,389

MARKET ADJUSTMENTS

TYPE	MDL	EFF. AREA	TOT ADJ PTS	EFF. BASE RATE	REPL. COST NEW	AYB	EYB	ECON	FNCT		NORM	% COND
0100	01	3,877	124.3588	139.28	539,989	2021	2021	0	0	0	4.00	96.00

1 SINGLE FAM 100% - 2022 Heated Area: 2953 HX Base Yr 2022

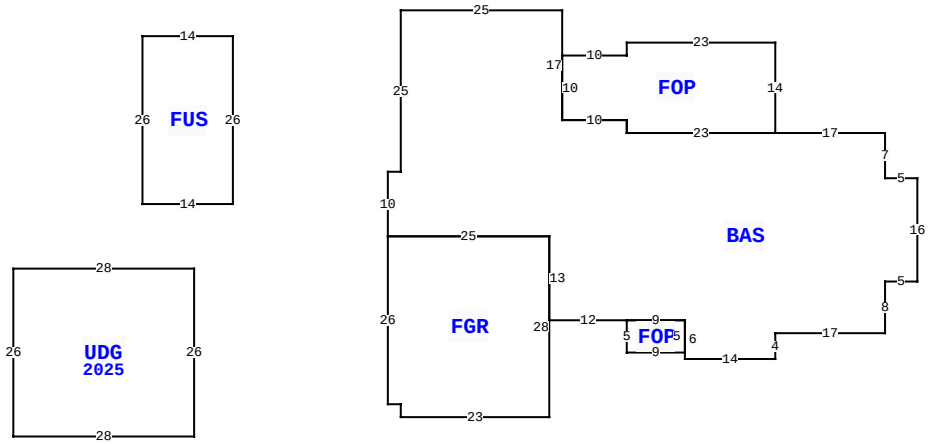

260 NW WHITTON CT, LAKE CITY

BLD DATE		LGL DATE	
XF DATE		LAND DATE	03/13/2025 MLU
INC DATE		AG DATE	

VALUATION SUMMARY

VALUATION BY		STANDARD
Tax Group: 3	Tax Dist:	
BUILDING MARKET VALUE		518,389
TOTAL MARKET OB/XF VALUE		9,490
TOTAL LAND VALUE - MARKET		103,125
TOTAL MARKET VALUE		631,004
SOH/AGL Deduction		23,824
ASSESSED VALUE		607,180
TOTAL EXEMPTION VALUE	HX HB 13	607,180
BASE TAXABLE VALUE		0
TOTAL JUST VALUE		631,004
NCON VALUE		0
INCOME VALUE		
PREVIOUS YEAR MKT VALUE		636,704

PERMIT NUM	DESCRIPTION	AMT	ISSUED
000053728	Swimming Pool and	157,000	07/31/2025
000048757	Storage Building	25,000	11/30/2023
000041776	New Residential C	200,000	04/21/2021

SALES DATA

OFF RECORD Number	DATE	TYPE INST	Q / U	V / I	RSN CD	SALE PRICE
1536/1453	3/21/2025	WD	Q	I	01	900,000
GRANTOR: GILLESPIE WILLIAM WES						
GRANTEE: CALIENDO MICHAEL P						
1502/1441	11/07/2023	QC	U	V	11	100
GRANTOR: GILLESPIE WILLIAM W J						
GRANTEE: GILLESPIE WILLIAM W						

BUILDING NOTES

BUILDING DIMENSIONS

BAS=[ORIG=24,-9] W5 N7 W17 W23 N2 W10 N17 W25 S25 W2 S10 E25 S13 E12 E9 S6 E14 N4 E17 N8 E5 N16 $
FGR=[ORIG=-33,0] W25 S26 E2 S2 E23 N28 $
FOP=[ORIG=2,-16] N14 W23 S2 W10 S10 E10 S2 E23 $
FUS=[ORIG=-96,-31] E14 S26 W14 N26 $
FOP=[ORIG=-21,18] E9 N5 W9 S5 $
UDG=[YR=2025;ORIG=-116,5] E28 S26 W28 N26 $
.

EXTRA FEATURES

LN	OB/XF CODE	DESCRIPTION	BLD	CAP	L	W	UNITS	UT	Adj R	ADJ UNIT PRICE	ORIG COND	YEAR ON	YEAR ACTUAL	Q	% COND	OB/XF MKT VALUE	NOTES
1	0166	CONC,PAVMT	0	100	0	0	1,230.00	UT	3.00	3.00	100	2022	2021		100	3,690	
2	0104	GENERATOR	0	100	0	0	1.00	UT	6,000.00	6,000.00	100	2023	2022		80	4,800	
3	0169	FENCE/WOOD	0	100	0	0	1.00	UT	1,000.00	1,000.00	100	2023	2022		100	1,000	

LAND DESCRIPTION

TOTAL OB/XF 9,490

LN	USE CODE	CLS	LAND USE DESCRIPTION	CAP	RD	LOC ZONE	FRONT	DEPTH	TOT LND UTS	UNIT TYPE	DT	DPTH FACT	% COND	TOT ADJ	UNIT PRICE	ADJ UNIT PRICE	LAND VALUE	OTHER ADJUSTMENTS AND NOTES	YEAR	DENSITY	DECL	FRZ	YR	CONSRV
1	0100	C	SFR	100		PRRD	0.00	0.00	1.00	LT		1.00	1.00	1.50	55,000.00	82,500.00	82,500							
2	0000	C	VAC RES	100		PRRD	0.00	0.00	0.25	LT		1.00	1.00	1.50	55,000.00	82,500.00	20,625							

REVIEW DATE 06/20/2025 BY TP Total Acres: 15.39 Total Land Value: 103,125 Market: 0 Agricultural: 0 Common: 103,125 PRINTED 10/02/2025 BY SYS