BEG INTERS N R/W CR-18 & E
LINE OF SE1/4 OF NE1/4, RUN N
622.04 FT TO NE COR OF SE1/4

MEARNS COREY/MEARNS IDALIZ
3935 SE CR 18
LAKE CITY, FL 32025

**2026**

**19-6S-18-10623-001**

## BUILDING CHARACTERISTICS

| ELEMENT | CD | CONSTRUCTION |
|---|---|---|
| Exterior Wall | 17 | MSNRY STUC 90 |
| Exterior Wall | 21 | STONE 10 |
| Roof Structur | 03 | GABLE/HIP 100 |
| Roof Cover | 14 | PREFIN MT 100 |
| Interior Wall | 05 | DRYWALL 100 |
| Interior Floo | 14 | CARPET 80 |
| Interior Floo | 15 | HARDTILE 20 |
| Air Condition | 03 | CENTRAL 100 |
| Heating Type | 04 | AIR DUCTED 100 |
| Bedrooms | | 3 100 |
| Bathrooms | | 3 100 |
| Frame | 01 | NONE 100 |
| Stories | 1. | 1. 100 |
| Architectual | 05 | CONV 100 |
| Units | | 0 100 |
| Condition Adj | 04 | 04 100 |
| Kitchen Adjus | 01 | 01 100 |
| Quality | 05 | 05 |
| DOR CODE | 0100 | SINGLE FAMILY |
| MAP NUM | | MKT AREA 02 |
| NEIGHBORHOOD/LOC | 19618.00 | 1.00/ |

| AREA TYPE | TOTAL GROSS AREA | PCT OF BASE | YEAR | TOT ADJ AREA | SUBAREA MARKET VALUE |
|---|---|---|---|---|---|
| BAS | 2,790 | 100 | | 2,790 | 262,014 |
| FOP | 72 | 30 | | 22 | 2,066 |
| PTO | 522 | 5 | | 26 | 2,441 |
| UOP | 210 | 20 | | 42 | 3,944 |
| UST | 273 | 45 | | 123 | 11,551 |
| TOTALS | 3,867 | | | 3,003 | 282,017 |

## MARKET ADJUSTMENTS

| TYPE | MDL | EFF. AREA | TOT ADJ PTS | EFF. BASE RATE | REPL. COST NEW | AYB | EYB | ECON | FNCT | | NORM | % COND |
|---|---|---|---|---|---|---|---|---|---|---|---|---|
| 0100 | 01 | 3,003 | 129.0003 | 144.48 | 433,873 | 1976 | 1985 | 0 | 0 | 0 | 35.00 | 65.00 |

1 SINGLE FAM 100% - 2011 Heated Area: 2790 HX Base Yr 2011

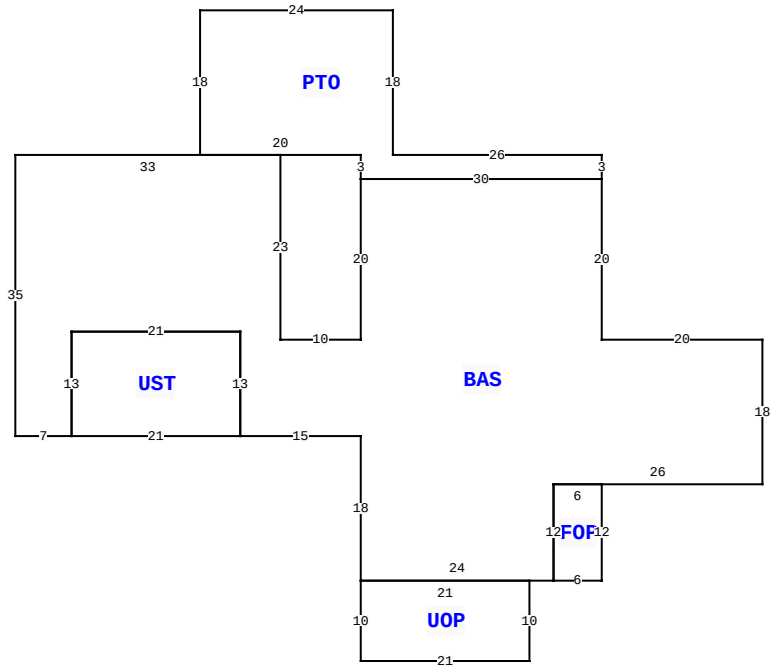


3935 SE COUNTY ROAD 18 , LAKE CITY

| | | | |
|---|---|---|---|
| BLD DATE | | LGL DATE | |
| XF DATE | | LAND DATE | 05/05/2023 MLU |
| INC DATE | | AG DATE | |

## COLUMBIA COUNTY PROPERTY

PAGE 1 of 1 3

### VALUATION SUMMARY

| | | |
|---|---|---|
| VALUATION BY | | STANDARD |
| Tax Group: 3 | Tax Dist: | |
| BUILDING MARKET VALUE | | 282,017 |
| TOTAL MARKET OB/XF VALUE | | 6,059 |
| TOTAL LAND VALUE - MARKET | | 51,000 |
| TOTAL MARKET VALUE | | 339,076 |
| SOH/AGL Deduction | | 128,500 |
| ASSESSED VALUE | | 210,576 |
| TOTAL EXEMPTION VALUE | HX HB | 50,722 |
| BASE TAXABLE VALUE | | 159,854 |
| TOTAL JUST VALUE | | 339,076 |
| NCON VALUE | | 0 |
| INCOME VALUE | | |
| PREVIOUS YEAR MKT VALUE | | 339,076 |

| PERMIT NUM | DESCRIPTION | AMT | ISSUED |
|---|---|---|---|
| | | | |

## SALES DATA

| OFF RECORD Number | DATE | TYPE INST | Q U / | V I / | RSN CD | SALE PRICE |
|---|---|---|---|---|---|---|
| 1204/1856 | 9/30/2010 | WD | U | I | 11 | 0 |
| GRANTOR: MICHAEL C & KATHERINE | | | | | | |
| GRANTEE: COREY & IDALIZ MEAR | | | | | | |
| 0677/0718 | 2/22/1989 | SW | U | I | | 72,500 |
| GRANTOR: FIRST CHARTER BANK | | | | | | |
| GRANTEE: JARVIS MICHAEL | | | | | | |

## BUILDING NOTES

## BUILDING DIMENSIONS

BAS= W20 N20 PTO= N3 W26 N18 W24 S18 E20 S3 E30$ W30 S20 W10 N23 W33 S35 E7 UST= E21 N13W21 S13$N13 E21 S13 E15 S18 UOP= S10 E21 N10W21$ E24 FOP= E6 N12 W6 S12$ N12E26 N18$.

## EXTRA FEATURES

| LN | OB/XF CODE | DESCRIPTION | BLD | CAP | L | W | UNITS | UT | Adj R | ADJ UNIT PRICE | ORIG COND | YEAR ON | YEAR ACTUAL | Q | % COND | OB/XF MKT VALUE | NOTES |
|---|---|---|---|---|---|---|---|---|---|---|---|---|---|---|---|---|---|
| 1 | 0190 | FPLC PF | 0 | 100 | 0 | 0 | 1.00 | UT | 1,200.00 | 1,200.00 | 100 | 0 | 0 | 3 | 100 | 1,200 | |
| 2 | 0060 | CARPORT F | 0 | 100 | 24 | 24 | 576.00 | UT | 3.50 | 3.50 | 100 | 2005 | 2005 | 3 | 100 | 2,016 | |
| 3 | 0166 | CONC,PAVMT | 0 | 100 | 24 | 12 | 288.00 | UT | 2.25 | 2.25 | 100 | 2005 | 2005 | 3 | 100 | 648 | |
| 4 | 0080 | DECKING | 0 | 100 | 23 | 10 | 230.00 | UT | 6.50 | 6.50 | 100 | 2005 | 2005 | 3 | 100 | 1,495 | |
| 5 | 0080 | DECKING | 0 | 100 | 0 | 0 | 1.00 | UT | 0.00 | 0.00 | 100 | 2005 | 2005 | 3 | 100 | 200 | |
| 6 | 0252 | LEAN-TO W/ | 0 | 100 | 0 | 0 | 1.00 | UT | 0.00 | 0.00 | 100 | 2005 | 2005 | 3 | 100 | 400 | |
| 7 | 0169 | FENCE/WOOD | 0 | 100 | 0 | 0 | 1.00 | UT | 0.00 | 0.00 | 100 | 2005 | 2005 | 3 | 100 | 100 | |

## LAND DESCRIPTION

TOTAL OB/XF 6,059

| LN | USE CODE | CLS | LAND USE DESCRIPTION | CAP | RD | LOC ZONE | FRONT | DEPTH | TOT LND UTS | UNIT TYPE | DT | DPTH FACT | % COND | TOT ADJ | UNIT PRICE | ADJ UNIT PRICE | LAND VALUE | OTHER ADJUSTMENTS AND NOTES | YEAR | DENSITY | DECL | FRZ | YR | CONSRV |
|---|---|---|---|---|---|---|---|---|---|---|---|---|---|---|---|---|---|---|---|---|---|---|---|---|
| 1 | 0100 | C | SFR | 100 | | A-1 | 0.00 | 0.00 | 6.00 | AC | | 1.00 | 1.00 | 1.00 | 8,500.00 | 8,500.00 | 51,000 | | | | | | | |

REVIEW DATE 10/06/2015 BY DF Total Acres: 6.00 Total Land Value: 51,000 Market: 0 Agricultural: 0 Common: 51,000 PRINTED 11/19/2025 BY SYS