NW1/4 OF SW1/4 EX CO RD R/W
ORB 378-451.

MILLER DEBORAH W/MILLER DONALD LARRY
268 SE LESLIE WOOD LN
LULU, FL 32061

2026

19-5S-18-10599-004

COLUMBIA COUNTY PROPERTY

BUILDING CHARACTERISTICS

ELEMENT	CD	CONSTRUCTION
Exterior Wall	19	COMMON BRK 70
Exterior Wall	31	VINYL SID 30
Roof Structur	03	GABLE/HIP 100
Roof Cover	12	MODULAR MT 100
Interior Wall	05	DRYWALL 100
Interior Floo	14	CARPET 100
Air Condition	03	CENTRAL 100
Heating Type	04	AIR DUCTED 100
Bedrooms		3 100
Bathrooms		2 100
Frame	01	NONE 100
Stories	1.	1. 100
Architectual	05	CONV 100
Units		0 100
Condition Adj	02	02 100
Kitchen Adjus	01	01 100
Quality	05	05
DOR CODE	5000	IMPROVED AG
MAP NUM		MKT AREA 02
NEIGHBORHOOD/LOC	1518.00	1.00/

AREA TYPE	TOTAL GROSS AREA	PCT OF BASE	YEAR	TOT ADJ AREA	SUBAREA MARKET VALUE
BAS	84	100		84	5,940
BAS	104	100		104	7,353
BAS	1,656	100		1,656	117,091
FCP	670	25		168	11,879
FOP	104	30		31	2,192
FOP	110	30		33	2,334
FST	104	55		57	4,030
SFB	624	80		499	35,283
UCP	182	20		36	2,545
USP	672	35		235	16,616
TOTALS	4,310			2,903	205,262

MARKET ADJUSTMENTS

TYPE	MDL	EFF. AREA	TOT ADJ PTS	EFF. BASE RATE	REPL. COST NEW	AYB	EYB	ECON	FNCT		NORM	% COND
0100	01	2,903	97.1280	108.78	315,788	1978	1978	0	0	0	35.00	65.00

1 SINGLE FAM 100% - 0 Heated Area: 2468 HX Base Yr

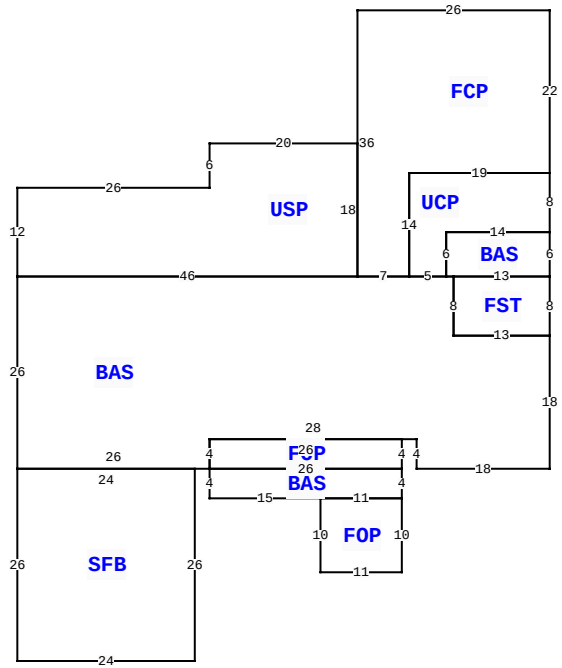

268 SE LESLIE WOOD LN, LULU

BLD DATE		LGL DATE	
XF DATE		LAND DATE	
INC DATE		AG DATE	

VALUATION SUMMARY

VALUATION BY		STANDARD
Tax Group: 3	Tax Dist:	
BUILDING MARKET VALUE		241,855
TOTAL MARKET OB/XF VALUE		6,130
TOTAL LAND VALUE - MARKET		117,000
TOTAL MARKET VALUE		264,345
SOH/AGL Deduction		96,416
ASSESSED VALUE		167,929
TOTAL EXEMPTION VALUE	HX HB	50,722
BASE TAXABLE VALUE		117,207
TOTAL JUST VALUE		364,985
NCON VALUE		0
INCOME VALUE		
PREVIOUS YEAR MKT VALUE		364,985

PERMIT NUM	DESCRIPTION	AMT	ISSUED

SALES DATA

OFF RECORD Number	DATE	TYPE INST	Q U /	V I /	RSN CD	SALE PRICE
1200/1545	8/24/2010	WD	U	I	16	100

GRANTOR: DAVID G & KATHLEEN D

GRANTEE: DEBORAH W & DONALD

BUILDING NOTES

BUILDING DIMENSIONS

FST= N8 W13 S8 E13$ BAS= W13 N8 BAS= E13 N6 W14 S6 E1$ W1 UCP= N6 E14 N8 W19 S14 E5$ W5 FCP= N14 E19 N22 W26 S36 E7$ W7 USP= N18 W20 S6 W26 S12 E46 $ W46 S26 SFB= S26 E24 N26 W24$ E26 BAS= S4 E15 FOP= S10 E11 N10 W11$ E11 N4 W26$ FOP= E26 N4 W26 S4$ N4 E28 S4 E18 N18$.

EXTRA FEATURES

LN	OB/XF CODE	DESCRIPTION	BLD	CAP	L	W	UNITS	UT	Adj R	ADJ UNIT PRICE	ORIG COND	YEAR ON	YEAR ACTUAL	Q	% COND	OB/XF MKT VALUE	NOTES
1	0190	FPLC PF	0	100	0	0	1.00	UT	1,200.00	1,200.00	100	0	0	3	100	1,200	
2	0258	PATIO	0	100	0	0	1.00	UT	0.00	0.00	100	0	0	3	100	100	
3	0040	BARN,POLE	0	100	30	46	1.00	UT	0.00	0.00	100	0	0	3	100	1,500	
4	0296	SHED METAL	0	100	8	8	64.00	UT	9.00	9.00	60	2013	2013	3	60	346	
5	0252	LEAN-TO W/	0	100	36	0	432.00	UT	1.50	1.50	60	2013	2013	3	60	389	
6	0040	BARN,POLE	0	100	12	36	432.00	UT	2.50	2.50	60	2013	2013	3	60	648	
7	0040	BARN,POLE	0	100	29	39	1,131.00	UT	2.50	2.50	60	2013	2013	3	60	1,697	
8	0294	SHED WOOD/	0	100	0	0	1.00	UT	0.00	0.00	100	2013	2013	3	100	200	
9	0251	LEAN TO W/	0	100	0	0	1.00	UT	0.00	0.00	100	2013	2013	3	100	50	

LAND DESCRIPTION

TOTAL OB/XF 6,130

LN	USE CODE	CLS	LAND USE DESCRIPTION	CAP	RD	LOC ZONE	FRONT	DEPTH	TOT LND UTS	UNIT TYPE	DT	DPTH FACT	% COND	TOT ADJ	UNIT PRICE	ADJ UNIT PRICE	LAND VALUE	OTHER ADJUSTMENTS AND NOTES	YEAR	DENSITY	DECL	FRZ	YR	CONSRV
1	6200	A	PASTURE 3	0			0.00	0.00	37.00	AC		1.00	1.00	1.00	280.00	280.00	10,360							
2	0100	C	SFR	100			0.00	0.00	1.00	AC		1.00	1.00	1.00	3,000.00	3,000.00	3,000							
3	9910	M	MKT.VAL.AG	0			0.00	0.00	37.00	AC		1.00	1.00	1.00	3,000.00	3,000.00	111,000							
4	0100	C	SFR	0			0.00	0.00	1.00	AC		1.00	1.00	1.00	3,000.00	3,000.00	3,000							

REVIEW DATE 09/06/2015 BY DF Total Acres: 39.00 Total Land Value: 16,360 Market: 111,000 Agricultural: 10,360 Common: 6,000 PRINTED 11/21/2025 BY SYS

NW1/4 OF SW1/4 EX CO RD R/W
ORB 378-451.

MILLER DEBORAH W/MILLER DONALD LARRY
268 SE LESLIE WOOD LN
LULU, FL 32061

2026

19-5S-18-10599-004

COLUMBIA COUNTY PROPERTY

BUILDING CHARACTERISTICS

ELEMENT	CD	CONSTRUCTION
Exterior Wall	15	CONC BLOCK 100
Roof Structur	03	GABLE/HIP 100
Roof Cover	12	MODULAR MT 100
Interior Wall	04	PLYWOOD 100
Interior Floo	06	VINYL ASB 100
Air Condition	02	WINDOW 100
Heating Type	01	NONE 100
Bedrooms		3 100
Bathrooms		1 100
Frame	01	NONE 100
Stories	1.	1. 100
Architectual	05	CONV 100
Units		0 100
Condition Adj	01	01 100
Kitchen Adjus	01	01 100
Quality	01	01
DOR CODE	5000	IMPROVED AG
MAP NUM		MKT AREA 02
NEIGHBORHOOD/LOC	1518.00	1.00/

AREA TYPE	TOTAL GROSS AREA	PCT OF BASE	YEAR	TOT ADJ AREA	SUBAREA MARKET VALUE
BAS	1,107	100		1,107	33,122
FCP	260	25		65	1,945
FOP	32	30		10	299
UST	91	45		41	1,227
TOTALS	1,490			1,223	36,593

MARKET ADJUSTMENTS

TYPE	MDL	EFF. AREA	TOT ADJ PTS	EFF. BASE RATE	REPL. COST NEW	AYB	EYB	ECON	FNCT	AP	NORM	% COND
0100	01	1,223	59.3640	66.49	81,317	1960	1960	0	0	20	35.00	45.00

2 SINGLE FAM 0% - 0 Heated Area: 1107 HX Base Yr

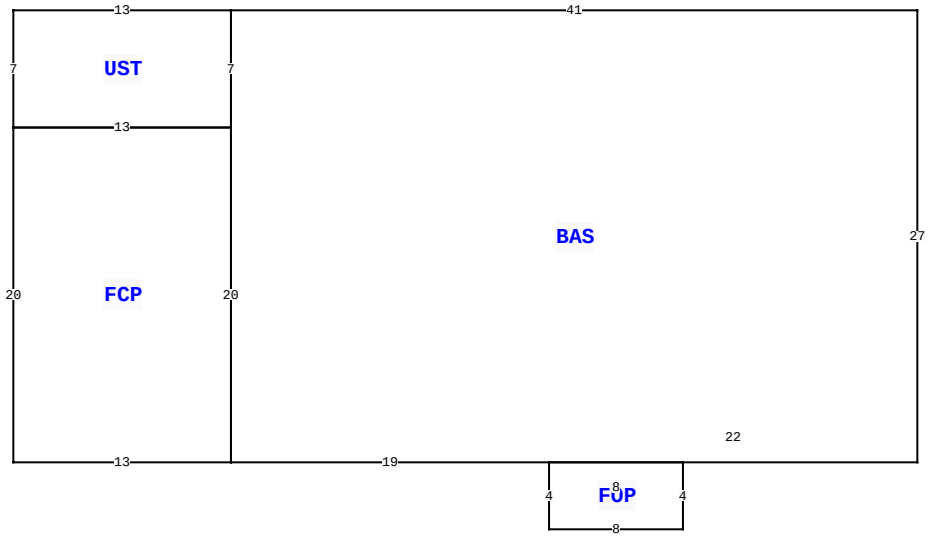

268 SE LESLIE WOOD LN, LULU

BLD DATE		LGL DATE	
XF DATE		LAND DATE	
INC DATE		AG DATE	

VALUATION SUMMARY

VALUATION BY		STANDARD
Tax Group: 3	Tax Dist:	
BUILDING MARKET VALUE		241,855
TOTAL MARKET OB/XF VALUE		6,130
TOTAL LAND VALUE - MARKET		117,000
TOTAL MARKET VALUE		264,345
SOH/AGL Deduction		96,416
ASSESSED VALUE		167,929
TOTAL EXEMPTION VALUE	HX HB	50,722
BASE TAXABLE VALUE		117,207
TOTAL JUST VALUE		364,985
NCON VALUE		0
INCOME VALUE		
PREVIOUS YEAR MKT VALUE		364,985

PERMIT NUM	DESCRIPTION	AMT	ISSUED

SALES DATA

OFF RECORD Number	DATE	TYPE INST	Q / U	V / I	RSN CD	SALE PRICE
1200/1545	8/24/2010	WD	U	I	16	100

GRANTOR: DAVID G & KATHLEEN D

GRANTEE: DEBORAH W & DONALD

BUILDING NOTES

BUILDING DIMENSIONS

BAS= W41 UST= W13 S7 E13 N7$ S7 FCP= W13 S20 E13 N20 $ S20 E19 FOP= S4 E8 N4 W8$ E22 N27$.

EXTRA FEATURES

L N	OB/XF CODE	DESCRIPTION	BLD	CAP	L	W	UNITS	UT	Adj R	ADJ UNIT PRICE	ORIG COND	YEAR ON	YEAR ACTUAL	Q	% COND	OB/XF MKT VALUE	NOTES

LAND DESCRIPTION

TOTAL OB/XF 0

L N	USE CODE	CLS	LAND USE DESCRIPTION	CAP	R D	LOC ZONE	FRONT	DEPTH	TOT LND UTS	UNIT TYPE	D T	DPTH FACT	% COND	TOT ADJ	UNIT PRICE	ADJ UNIT PRICE	LAND VALUE	OTHER ADJUSTMENTS AND NOTES	YEAR	DENSITY	DECL	FRZ	YR	CONSRV

REVIEW DATE 09/06/2015 BY DF Total Acres: 39.00 Total Land Value: 16,360 Market: 111,000 Agricultural: 10,360 Common: 6,000 PRINTED 11/21/2025 BY SYS