BEG AT SE COR OF SEC 19, W 648.1 FT TO S R/W LINE OF A 40-FOOT CO 60.00 FT, S 137.51 FT, E 200 FT,

PHILLIPS EVERETT A
131 SE BRANTLEY CT
LULU, FL 32061

2026

19-5S-18-10596-007

COLUMBIA COUNTY PROPERTY

BUILDING CHARACTERISTICS

ELEMENT	CD	CONSTRUCTION
Exterior Wall	25	MOD METAL 100
Roof Structur	10	STEEL FRME 100
Roof Cover	12	MODULAR MT 100
Interior Wall	04	PLYWOOD 50
Interior Wall	05	DRYWALL 50
Interior Floo	08	SHT VINYL 50
Interior Floo	14	CARPET 50
Air Condition	03	CENTRAL 100
Heating Type	04	AIR DUCTED 100
Bedrooms		1 100
Bathrooms		2 100
Frame	05	STEEL 100
Stories	0	0 100
Architectual	05	CONV 100
Units		0 100
Condition Adj	01	01 100
Quality	05	05
DOR CODE	5000	IMPROVED AG
MAP NUM		MKT AREA 02
NEIGHBORHOOD/LOC	1518.00	1.00/

AREA TYPE	TOTAL GROSS AREA	PCT OF BASE	YEAR	TOT ADJ AREA	SUBAREA MARKET VALUE
BAS	1,782	100		1,782	73,786
UOP	360	20		72	2,981
UOP	2,452	20		490	20,289
UOP	4,090	20		818	33,870
TOTALS	8,684			3,162	130,926

MARKET ADJUSTMENTS

TYPE	MDL	EFF. AREA	TOT ADJ PTS	EFF. BASE RATE	REPL. COST NEW	AYB	EYB	ECON	FNCT	AP	NORM	% COND
0187	01	3,162	86.2600	69.01	218,210	2005	2005	0	0	15	25.00	60.00

1 SFR/PREMTL 100% - 2005 Heated Area: 1782 HX Base Yr 2005

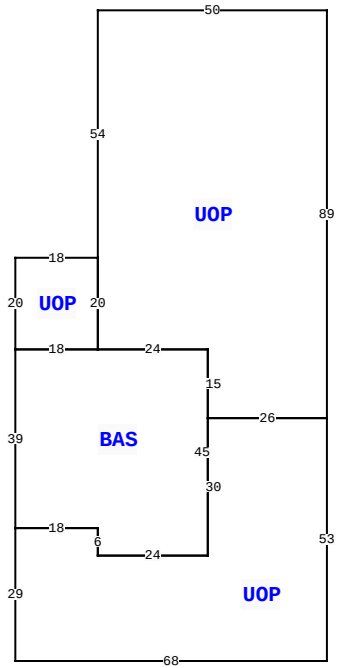

131 SE BRANTLEY CT, LULU

BLD DATE		LGL DATE	
XF DATE		LAND DATE	
INC DATE		AG DATE	

COLUMBIA COUNTY PROPERTY — VALUATION SUMMARY

VALUATION BY		STANDARD
Tax Group: 3	Tax Dist:	
BUILDING MARKET VALUE		130,926
TOTAL MARKET OB/XF VALUE		3,000
TOTAL LAND VALUE - MARKET		102,440
TOTAL MARKET VALUE		144,841
SOH/AGL Deduction		34,502
ASSESSED VALUE		110,339
TOTAL EXEMPTION VALUE	HX HB SX VP	110,339
BASE TAXABLE VALUE		0
TOTAL JUST VALUE		236,366
NCON VALUE		0
INCOME VALUE		
PREVIOUS YEAR MKT VALUE		239,094

PERMIT NUM	DESCRIPTION	AMT	ISSUED
000046043	Electrical Servic	0	12/06/2022
000042357	Electrical Servic	0	07/19/2021

SALES DATA

OFF RECORD Number	DATE	TYPE INST	Q U	V I	RSN CD	SALE PRICE
1499/625	9/19/2023	LE	U	I	14	100
GRANTOR: PHILLIPS EVERETT A (E						
GRANTEE: THORNTON TERRI PHIL						
1192/1506	4/13/2010	WD	U	I	11	100
GRANTOR: EVERETT LEE PHILLIPS						
GRANTEE: EVERETT & KATHY PHI						

BUILDING NOTES

BUILDING DIMENSIONS

UOP= W50 S54 UOP= W18 S20 E18 N20$ S20 BAS= W18 S39 UOP= S29 E68 N53 W26 S30 W24 N6 W18$ E18 S6 E24 N45 W24$ E24 S15 E26N89$.

EXTRA FEATURES

LN	OB/XF CODE	DESCRIPTION	BLD	CAP	L	W	UNITS	UT	Adj R	ADJ UNIT PRICE	ORIG COND	YEAR ON	YEAR ACTUAL	Q	% COND	OB/XF MKT VALUE	NOTES
1	0030	BARN,MT	0	100	40	30	1.00	UT	0.00	0.00	100	2006	2006	3	100	1,500	
2	0166	CONC,PAVMT	0	100	0	0	1.00	UT	0.00	0.00	100	2013	2013	3	100	400	
3	0120	CLFENCE 4	0	100	0	0	1.00	UT	0.00	0.00	100	2015	2015	3	100	500	
4	0070	CARPORT UF	0	100	0	0	1.00	UT	0.00	0.00	100	2015	2015	3	100	600	

LAND DESCRIPTION

TOTAL OB/XF 3,000

LN	USE CODE	CLS	LAND USE DESCRIPTION	CAP	RD	LOC ZONE	FRONT	DEPTH	TOT LND UTS	UNIT TYPE	DT	DPTH FACT	% COND	TOT ADJ	UNIT PRICE	ADJ UNIT PRICE	LAND VALUE	OTHER ADJUSTMENTS AND NOTES	YEAR	DENSITY	DECL	FRZ	YR	CONSRV
1	0100	C	SFR	100			0.00	0.00	1.00	AC		1.00	1.00	1.00	4,000.00	4,000.00	4,000							
2	5600	A	TIMBER 3	0			0.00	0.00	24.61	AC		1.00	1.00	1.00	281.00	281.00	6,915							
3	9910	M	MKT.VAL.AG	0			0.00	0.00	24.61	AC		1.00	1.00	1.00	4,000.00	4,000.00	98,440							

REVIEW DATE 07/30/2021 BY JB Total Acres: 25.61 Total Land Value: 10,915 Market: 98,440 Agricultural: 6,915 Common: 4,000 PRINTED 11/21/2025 BY SYS