LOTS 20 & 21 BLOCK 1 PINE
KNOLL S/D. DC 1141-2147

LIM MARTHA ROSE
194 SW WISDOM WAY
LAKE CITY, FL 32025

2026

19-4S-17-08572-012

COLUMBIA COUNTY PROPERTY

BUILDING CHARACTERISTICS

ELEMENT	CD	CONSTRUCTION
Exterior Wall	19	COMMON BRK 100
Roof Structur	03	GABLE/HIP 100
Roof Cover	12	MODULAR MT 100
Interior Wall	05	DRYWALL 100
Interior Floo	14	CARPET 90
Interior Floo	06	VINYL ASB 10
Air Condition	03	CENTRAL 100
Heating Type	04	AIR DUCTED 100
Bedrooms		4 100
Bathrooms		2.5 100
Frame	01	NONE 100
Stories	1.	1. 100
Architectual	05	CONV 100
Units		0 100
Condition Adj	03	03 100
Kitchen Adjus	01	01 100
Quality	05	05

DOR CODE	0100	SINGLE FAMILY	
MAP NUM		MKT AREA	06
NEIGHBORHOOD/LOC	19417.030	1.00/	

AREA TYPE	TOTAL GROSS AREA	PCT OF BASE	YEAR	TOT ADJ AREA	SUBAREA MARKET VALUE
BAS	3,180	100		3,180	259,367
FGR	506	55		278	22,674
FST	184	55		101	8,237
UOP	30	20		6	489
UOP	352	20		70	5,710
TOTALS	4,252			3,635	296,478

MARKET ADJUSTMENTS

TYPE	MDL	EFF. AREA	TOT ADJ PTS	EFF. BASE RATE	REPL. COST NEW	AYB	EYB	ECON	FNCT		NORM	% COND
0100	01	3,635	112.0350	125.48	456,120	1972	1972	0	0	0	35.00	65.00

1 SINGLE FAM 100% - 1995 Heated Area: 3180 HX Base Yr 1995

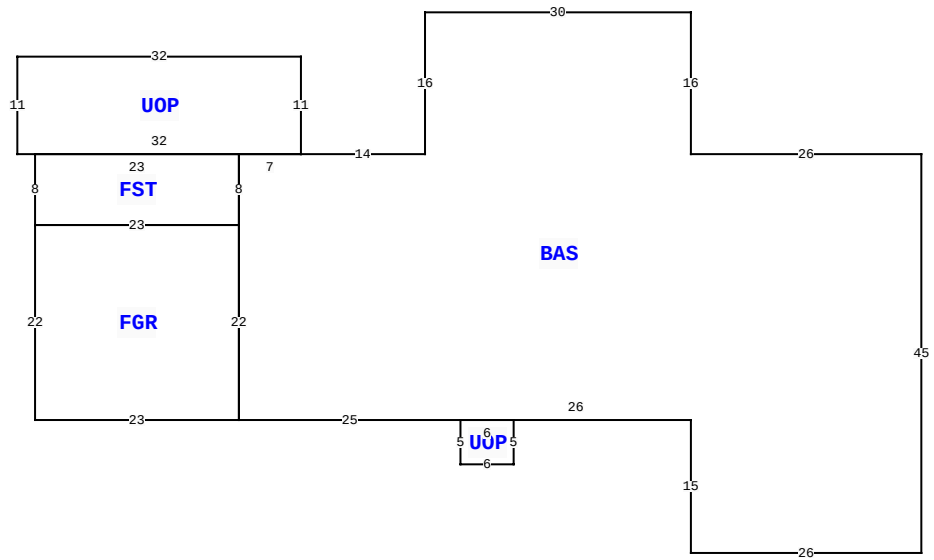

194 SW WISDOM WAY, LAKE CITY

BLD DATE		LGL DATE	
XF DATE		LAND DATE	04/21/2023 MLU
INC DATE		AG DATE	

VALUATION SUMMARY

VALUATION BY		STANDARD
Tax Group: 2	Tax Dist:	
BUILDING MARKET VALUE		296,478
TOTAL MARKET OB/XF VALUE		5,743
TOTAL LAND VALUE - MARKET		31,450
TOTAL MARKET VALUE		333,671
SOH/AGL Deduction		145,152
ASSESSED VALUE		188,519
TOTAL EXEMPTION VALUE	HX HB WX BX	60,722
BASE TAXABLE VALUE		127,797
TOTAL JUST VALUE		333,671
NCON VALUE		0
INCOME VALUE		
PREVIOUS YEAR MKT VALUE		333,671

PERMIT NUM	DESCRIPTION	AMT	ISSUED

SALES DATA

OFF RECORD Number	DATE	TYPE INST	Q / U	V / I	RSN CD	SALE PRICE

BUILDING NOTES

BUILDING DIMENSIONS

BAS= W26 N16 W30 S16 W14 UOP= N11 W32 S11 E32$ W7 FST= W23 S8 E23 N8$ S8 FGR= W23 S22 E23 N22$ S22 E25 UOP= S5 E6 N5 W6$ E26 S15 E26N45$.

EXTRA FEATURES

LN	OB/XF CODE	DESCRIPTION	BLD	CAP	L	W	UNITS	UT	Adj R	ADJ UNIT PRICE	ORIG COND	YEAR ON	YEAR ACTUAL	Q	% COND	OB/XF MKT VALUE	NOTES
1	0166	CONC,PAVMT	0	100	0	0	1.00	UT	0.00	0.00	100	0	0	3	100	425	
2	0190	FPLC PF	0	100	0	0	1.00	UT	1,200.00	1,200.00	100	0	0	3	100	1,200	
3	0258	PATIO	0	100	0	0	1.00	UT	0.00	0.00	100	0	0	3	100	180	
4	0294	SHED WOOD/	0	100	23	30	1.00	UT	0.00	0.00	100	0	0	3	100	2,240	
5	0261	PRCH, UOP	0	100	11	11	1.00	UT	0.00	0.00	100	0	0	3	100	118	
6	0070	CARPORT UF	0	100	18	20	360.00	UT	3.00	3.00	100	1993	1993	3	100	1,080	
7	0130	CLFENCE 5	0	100	0	0	1.00	UT	0.00	0.00	100	1993	1993	3	100	500	

LAND DESCRIPTION

TOTAL OB/XF 5,743

LN	USE CODE	CLS	LAND USE DESCRIPTION	CAP	RD	LOC ZONE	FRONT	DEPTH	TOT LND UTS	UNIT TYPE	DT	DPTH FACT	% COND	TOT ADJ	UNIT PRICE	ADJ UNIT PRICE	LAND VALUE	OTHER ADJUSTMENTS AND NOTES	YEAR	DENSITY	DECL	FRZ	YR	CONSRV
1	0100	C	SFR	100		RSF-1	0.00	0.00	2.00	LT		1.00	1.00	0.85	18,500.00	15,725.00	31,450							

REVIEW DATE 05/11/2017 BY DF Total Acres: 2.13 Total Land Value: 31,450 Market: 0 Agricultural: 0 Common: 31,450 PRINTED 11/19/2025 BY SYS