BEG SE COR OF SEC, RUN W 1507.44
E 339.24 FT, S 182 FT, E 1132.56
TO POB. EX 21.42 AC DESC IN ORB

SHRUM MELINDA
1811 SW COUNTY ROAD 242 A
LAKE CITY, FL 32025

2026

19-4S-17-08566-000

COLUMBIA COUNTY PROPERTY

BUILDING CHARACTERISTICS

ELEMENT	CD	CONSTRUCTION
Exterior Wall	19	COMMON BRK 100
Roof Structur	08	IRREGULAR 100
Roof Cover	03	COMP SHNGL 100
Interior Wall	05	DRYWALL 100
Interior Floo	15	HARDTILE 100
Air Condition	03	CENTRAL 100
Heating Type	04	AIR DUCTED 100
Bedrooms		3 100
Bathrooms		2 100
Frame	02	WOOD FRAME 100
Stories	1.	1. 100
Architectual	05	CONV 100
Units		0 100
Quality	07	07
DOR CODE	5000	IMPROVED AG
MAP NUM		MKT AREA 06
NEIGHBORHOOD/LOC	19417.00	1.00/

AREA TYPE	TOTAL GROSS AREA	PCT OF BASE	YEAR	TOT ADJ AREA	SUBAREA MARKET VALUE
BAS	1,682	100		1,682	210,219
FCP	546	25		136	16,998
FCP	576	25		144	17,998
FOP	230	30		69	8,624
FOP	294	30		88	10,998
TOTALS	3,328			2,119	264,836

MARKET ADJUSTMENTS

TYPE	MDL	EFF. AREA	TOT ADJ PTS	EFF. BASE RATE	REPL. COST NEW	AYB	EYB	ECON	FNCT		NORM	% COND
0100	01	2,119	134.4420	150.58	319,079	2008	2008	0	0	0	17.00	83.00

1 SINGLE FAM 100% - 0 Heated Area: 1682 HX Base Yr

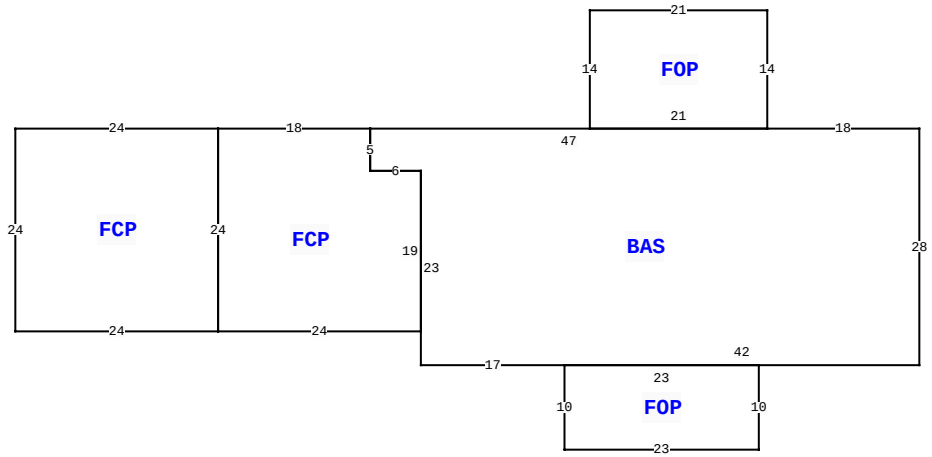

1811 SW COUNTY ROAD 242A , LAKE CITY

BLD DATE		LGL DATE	
XF DATE		LAND DATE	
INC DATE		AG DATE	

VALUATION SUMMARY

VALUATION BY		STANDARD
Tax Group: 2	Tax Dist:	
BUILDING MARKET VALUE		264,836
TOTAL MARKET OB/XF VALUE		19,490
TOTAL LAND VALUE - MARKET		321,300
TOTAL MARKET VALUE		305,044
SOH/AGL Deduction		88,458
ASSESSED VALUE		216,586
TOTAL EXEMPTION VALUE	HX HB	50,722
BASE TAXABLE VALUE		165,864
TOTAL JUST VALUE		605,626
NCON VALUE		0
INCOME VALUE		
PREVIOUS YEAR MKT VALUE		608,816

PERMIT NUM	DESCRIPTION	AMT	ISSUED
33996	ADDN SFR	200	04/26/2016
26616	SFR	543	01/15/2008

SALES DATA

OFF RECORD Number	DATE	TYPE INST	Q U	V I	RSN CD	SALE PRICE
1447/2733	9/01/2021	WD	U	I	11	100
GRANTOR: PETTYJOHN DWIGHT						
GRANTEE:						
1444/2750	8/06/2021	WD	U	I	11	100
GRANTOR: PETTYJOHN DWIGHT						
GRANTEE: PETTYJOHN DWIGHT						

BUILDING NOTES

BUILDING DIMENSIONS

BAS= W18 FOP= N14 W21 S14 E21$ W47 FCP= W18 FCP= W24 S24 E24 N24$ S24 E24 N19 W6 N5$ S5 E6 S23 E17 FOP= S10 E23 N10 W23$ E42 N28$.

EXTRA FEATURES

LN	OB/XF CODE	DESCRIPTION	BLD	CAP	L	W	UNITS	UT	Adj R	ADJ UNIT PRICE	ORIG COND	YEAR ON	YEAR ACTUAL	Q	% COND	OB/XF MKT VALUE	NOTES
1	0180	FPLC 1STRY	0	100	0	0	1.00	UT	2,000.00	2,000.00	100	2008	2008	3	100	2,000	
2	0166	CONC,PAVMT	0	100	0	0	630.00	UT	3.00	3.00	100	2008	2008	3	100	1,890	
3	0040	BARN,POLE	0	100	60	100	6,000.00	UT	2.50	2.50	100	2012	2012	3	100	15,000	
4	0081	DECKING WI	0	100	0	0	1.00	UT	0.00	0.00	100	2017	2017	3	100	100	
5	0020	BARN,FR	0	100	0	0	1.00	UT	0.00	0.00	100	2017	2017	3	100	400	
6	0252	LEAN-TO W/	0	100	0	0	1.00	UT	0.00	0.00	100	2017	2017	3	100	100	

LAND DESCRIPTION

TOTAL OB/XF 19,490

LN	USE CODE	CLS	LAND USE DESCRIPTION	CAP	RD	LOC ZONE	FRONT	DEPTH	TOT LND UTS	UNIT TYPE	DT	DPTH FACT	% COND	TOT ADJ	UNIT PRICE	ADJ UNIT PRICE	LAND VALUE	OTHER ADJUSTMENTS AND NOTES	YEAR	DENSITY	DECL	FRZ	YR	CONSRV
1	6200	A	PASTURE 3	0		A-1	0.00	0.00	20.42	AC		1.00	1.00	1.00	280.00	280.00	5,718							
2	9910	M	MKT.VAL.AG	0		A-1	0.00	0.00	20.42	AC		1.00	1.00	1.00	15,000.00	15,000.00	306,300							
3	0100	C	SFR	100			0.00	0.00	1.00	AC		1.00	1.00	1.00	15,000.00	15,000.00	15,000							

REVIEW DATE 05/11/2017 BY DF Total Acres: 21.42 Total Land Value: 20,718 Market: 306,300 Agricultural: 5,718 Common: 15,000 PRINTED 11/07/2025 BY SYS