LOT 2 CANNON CREEK CENTER.

ORB 817-531, 886-2247, WD 1307-2

PALLET ACQUISTION CO LLC
6920 POINTE INVERNESS WAY, SUITE 301
FORT WAYNE, IN 46804

2026

19-4S-17-08558-102

BUILDING CHARACTERISTICS

ELEMENT	CD	CONSTRUCTION
Exterior Wall	25	MOD METAL 70
Exterior Wall	15	CONC BLOCK 30
Roof Structur	09	RIDGE FRME 100
Roof Cover	12	MODULAR MT 100
Interior Wall	01	MINIMUM 100
Interior Floo	03	CONC FINSH 100
Ceiling	03	PART.FIN. 100
Air Condition	01	NONE 100
Heating Type	01	NONE 100
Plumbing		18 100
Frame	05	STEEL 100
Story Height		17 100
RMS		0 100
Stories	1.5	1.5 100
Units		0 100
Condition Adj	03	03 100
Quality	06	06
DOR CODE	4800	WAREHOSE/DISTRB
MAP NUM		MKT AREA 06
NEIGHBORHOOD/LOC	19417.040	1.00/

AREA TYPE	TOTAL GROSS AREA	PCT OF BASE	YEAR	TOT ADJ AREA	SUBAREA MARKET VALUE
AOF	180	150		270	7,343
AOF	180	150		270	7,343
AOF	180	150		270	7,343
AOF	1,320	150		1,980	53,847
AOF	3,792	150		5,688	154,687
BAS	8,208	100		8,208	223,219
BAS	9,360	100		9,360	254,548
CAN	900	30		270	7,343
CLP	912	60		547	14,876
TOTALS	25,032			26,863	730,547

MARKET ADJUSTMENTS

TYPE	MDL	EFF. AREA	TOT ADJ PTS	EFF. BASE RATE	REPL. COST NEW	AYB	EYB	ECON	FNCT		NORM	% COND
8700	06	26,863	106.8028	40.59	1,090,369	2000	2000	0	0	0	33.00	67.00

1 PREF M B A 0% - 0 Heated Area: 23220 HX Base Yr

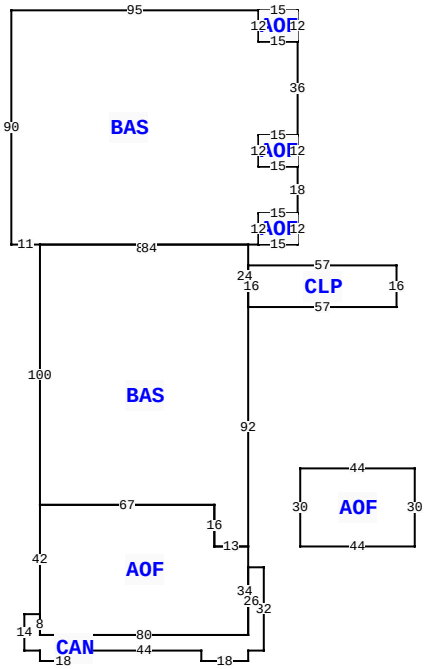

341 SW RING CT, LAKE CITY

BLD DATE		LGL DATE	
XF DATE		LAND DATE	
INC DATE		AG DATE	

COLUMBIA COUNTY PROPERTY

PAGE 1 of 2 2

VALUATION SUMMARY

VALUATION BY	STANDARD
Tax Group: 2	Tax Dist:
BUILDING MARKET VALUE	985,420
TOTAL MARKET OB/XF VALUE	40,687
TOTAL LAND VALUE - MARKET	180,119
TOTAL MARKET VALUE	1,206,226
SOH/AGL Deduction	0
ASSESSED VALUE	1,206,226
TOTAL EXEMPTION VALUE	0
BASE TAXABLE VALUE	1,206,226
TOTAL JUST VALUE	1,206,226
NCON VALUE	0
INCOME VALUE	
PREVIOUS YEAR MKT VALUE	1,235,213

SALE:1:1: LOT 2

PERMIT NUM	DESCRIPTION	AMT	ISSUED
24133	INDUSTRIAL	1,174	02/13/2006
19227	INDUSTRIAL	955	02/13/2002
16663	INDUSTRIAL	1,025	02/28/2000

SALES DATA

OFF RECORD Number	DATE	TYPE INST	Q U /	V I /	RSN CD	SALE PRICE
1307/0270	1/04/2016	WD	U	I	43	1,386,000
GRANTOR: HUB CITY IND						
GRANTEE: PALLET ACQUISTION C						
0886/2247	8/23/1999	WD	Q	V		105,000
GRANTOR: HORIZON IND						
GRANTEE: HUB CITY IND						

BUILDING NOTES

BUILDING DIMENSIONS

BAS= W80 BAS= W11 N90 E95 AOF= E15 S12 W15 N12$ S12 E15 S36 AOF= W15 S12 E15 N12$ W15 S12 E15 S18 AOF= W15 S12 E15 N12$ W15 S12 W84$ S100 AOF= S42 CAN= W6 S14 E6 S4 E18 N4 E44 S4 E18 N4 E6 N32 W6 S26 W80 N8$ S8 E80 N34 W13 N16 W67 $ E67 S16 E13 PTR= E20 AOF= E44 N30 W44 S30$ W20$ N92 CLP= E57 N16 W57 S16$ N24$.

EXTRA FEATURES

LN	OB/XF CODE	DESCRIPTION	BLD	CAP	L	W	UNITS	UT	Adj R	ADJ UNIT PRICE	ORIG COND	YEAR ON	YEAR ACTUAL	Q	% COND	OB/XF MKT VALUE	NOTES
1	0260	PAVEMENT-A	0	0	0	0	28,529.00	UT	0.90	0.90	80	2000	2000	3	80	20,541	
2	0260	PAVEMENT-A	0	0	0	0	14,798.00	UT	0.90	0.90	100	2002	2002	3	100	13,318	
3	0166	CONC,PAVMT	0	0	0	0	714.00	UT	2.00	2.00	100	2002	2002	3	100	1,428	
4	0166	CONC,PAVMT	0	0	0	0	2,160.00	UT	2.50	2.50	100	2006	2006	3	100	5,400	

LAND DESCRIPTION

TOTAL OB/XF 40,687

LN	USE CODE	CLS	LAND USE DESCRIPTION	CAP	RD	LOC ZONE	FRONT	DEPTH	TOT LND UTS	UNIT TYPE	DT	DPTH FACT	% COND	TOT ADJ	UNIT PRICE	ADJ UNIT PRICE	LAND VALUE	OTHER ADJUSTMENTS AND NOTES	YEAR	DENSITY	DECL	FRZ	YR	CONSRV
1	4800	C	WAREHOUSE	0		ILW	0.00	0.00	2.77	AC		1.00	1.00	0.85	76,500.00	65,025.00	180,119							

REVIEW DATE 05/09/2017 BY DF Total Acres: 2.77 Total Land Value: 180,119 Market: 0 Agricultural: 0 Common: 180,119 PRINTED 10/06/2025 BY SYS

LOT 2 CANNON CREEK CENTER.

ORB 817-531, 886-2247, WD 1307-2

PALLET ACQUISTION CO LLC
6920 POINTE INVERNESS WAY, SUITE 301
FORT WAYNE, IN 46804

2026

19-4S-17-08558-102

BUILDING CHARACTERISTICS

ELEMENT	CD	CONSTRUCTION
Exterior Wall	25	MOD METAL 100
Roof Structur	09	RIDGE FRME 100
Roof Cover	12	MODULAR MT 100
Interior Wall	01	MINIMUM 100
Interior Floo	03	CONC FINSH 100
Ceiling	03	PART.FIN. 100
Air Condition	01	NONE 100
Heating Type	01	NONE 100
Plumbing		6 100
Frame	05	STEEL 100
Story Height		15 100
RMS		0 100
Stories	1.	1. 100
Units		0 100
Condition Adj	03	03 100
Quality	06	06
DOR CODE	4800	WAREHOSE/DISTRB
MAP NUM		MKT AREA 06
NEIGHBORHOOD/LOC	19417.040	1.00/

AREA TYPE	TOTAL GROSS AREA	PCT OF BASE	YEAR	TOT ADJ AREA	SUBAREA MARKET VALUE
AOF	192	150		288	8,051
AOF	192	150		288	8,051
AOF	572	150		858	23,983
BAS	2,608	100		2,608	72,901
BAS	4,536	100		4,536	126,793
CAN	72	30		22	615
CAN	228	30		68	1,901
CLP	750	60		450	12,579
TOTALS	9,150			9,118	254,873

MARKET ADJUSTMENTS

TYPE	MDL	EFF. AREA	TOT ADJ PTS	EFF. BASE RATE	REPL. COST NEW	AYB	EYB	ECON	FNCT		NORM	% COND
8700	06	9,118	103.6035	39.37	358,976	2002	2002	0	0	0	29.00	71.00

2 PREF M B A 0% - 0 Heated Area: 8100 HX Base Yr

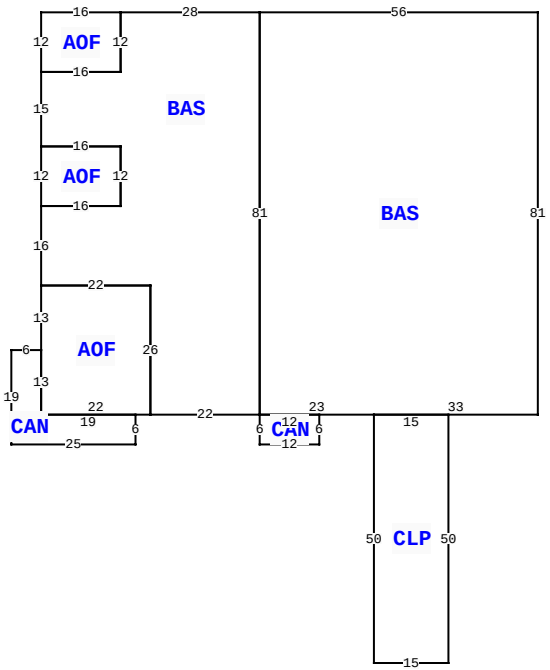

341 SW RING CT, LAKE CITY

BLD DATE		LGL DATE	
XF DATE		LAND DATE	
INC DATE		AG DATE	

COLUMBIA COUNTY PROPERTY

PAGE 2 of 2 2

VALUATION SUMMARY

VALUATION BY	STANDARD
Tax Group: 2	Tax Dist:
BUILDING MARKET VALUE	985,420
TOTAL MARKET OB/XF VALUE	40,687
TOTAL LAND VALUE - MARKET	180,119
TOTAL MARKET VALUE	1,206,226
SOH/AGL Deduction	0
ASSESSED VALUE	1,206,226
TOTAL EXEMPTION VALUE	0
BASE TAXABLE VALUE	1,206,226
TOTAL JUST VALUE	1,206,226
NCON VALUE	0
INCOME VALUE	
PREVIOUS YEAR MKT VALUE	1,235,213

PERMIT NUM	DESCRIPTION	AMT	ISSUED

SALES DATA

OFF RECORD Number	DATE	TYPE INST	Q U	V I	RSN CD	SALE PRICE
1307/0270	1/04/2016	WD	U	I	43	1,386,000
GRANTOR: HUB CITY IND						
GRANTEE: PALLET ACQUISTION C						
0886/2247	8/23/1999	WD	Q	V		105,000
GRANTOR: HORIZON IND						
GRANTEE: HUB CITY IND						

BUILDING NOTES

BUILDING DIMENSIONS

BAS= W56 BAS= W28 AOF= W16 S12 E16 N12$ S12 W16 S15 AOF= S12 E16 N12 W16$ E16 S12 W16 S16 AOF= S13 CAN= W6 S19 E25 N6 W19 N13$ S13 E22 N26 W22$ E22 S26 E22 N81$ S81 CAN= S6 E12 N6 W12$ E23 CLP= S50 E15 N50 W15$ E33 N81$.

EXTRA FEATURES

L N	OB/XF CODE	DESCRIPTION	BLD	CAP	L	W	UNITS	UT	Adj R	ADJ UNIT PRICE	ORIG COND	YEAR ON	YEAR ACTUAL	Q	% COND	OB/XF MKT VALUE	NOTES

LAND DESCRIPTION

TOTAL OB/XF 0

L N	USE CODE	CLS	LAND USE DESCRIPTION	CAP	R D	LOC ZONE	FRONT	DEPTH	TOT LND UTS	UNIT TYPE	D T	DPTH FACT	% COND	TOT ADJ	UNIT PRICE	ADJ UNIT PRICE	LAND VALUE	OTHER ADJUSTMENTS AND NOTES	YEAR	DENSITY	DECL	FRZ	YR	CONSRV

REVIEW DATE 05/09/2017 BY DF Total Acres: 2.77 Total Land Value: 180,119 Market: 0 Agricultural: 0 Common: 180,119 PRINTED 10/06/2025 BY SYS