BEG AT NW COR OF SEC, E 265 FT, 263.95 FT, N 243.23 FT TO POB & SEC, S 327 FT, E 1337.77 FT TO W

BARRY ROY CHRISTOPHER
1792 NW NOEGEL RD
LAKE CITY, FL 32055

2026

19-3S-16-02183-001

COLUMBIA COUNTY PROPERTY

BUILDING CHARACTERISTICS

ELEMENT	CD	CONSTRUCTION
Exterior Wall	19	COMMON BRK 100
Roof Structur	03	GABLE/HIP 100
Roof Cover	14	PREFIN MT 100
Interior Wall	04	PLYWOOD 50
Interior Wall	05	DRYWALL 50
Interior Floo	14	CARPET 90
Interior Floo	06	VINYL ASB 10
Air Condition	03	CENTRAL 100
Heating Type	04	AIR DUCTED 100
Bedrooms		3 100
Bathrooms		3 100
Frame	01	NONE 100
Stories	1.	1. 100
Architectual	05	CONV 100
Units		0 100
Condition Adj	03	03 100
Kitchen Adjus	01	01 100
Quality	05	05
DOR CODE	0100	SINGLE FAMILY
MAP NUM		MKT AREA 01
NEIGHBORHOOD/LOC	19316.00	1.00/

AREA TYPE	TOTAL GROSS AREA	PCT OF BASE	YEAR	TOT ADJ AREA	SUBAREA MARKET VALUE
BAS	1,953	100		1,953	171,008
FOP	10	30		3	263
FST	120	55		66	5,779
UGR	625	45		281	24,605
TOTALS	2,708			2,303	201,654

MARKET ADJUSTMENTS

TYPE	MDL	EFF. AREA	TOT ADJ PTS	EFF. BASE RATE	REPL. COST NEW	AYB	EYB	ECON	FNCT		NORM	% COND
0100	01	2,303	120.2800	134.71	310,237	1976	1976	0	0	0	35.00	65.00

1 SINGLE FAM 100% - 2024 Heated Area: 1953 HX Base Yr 2024

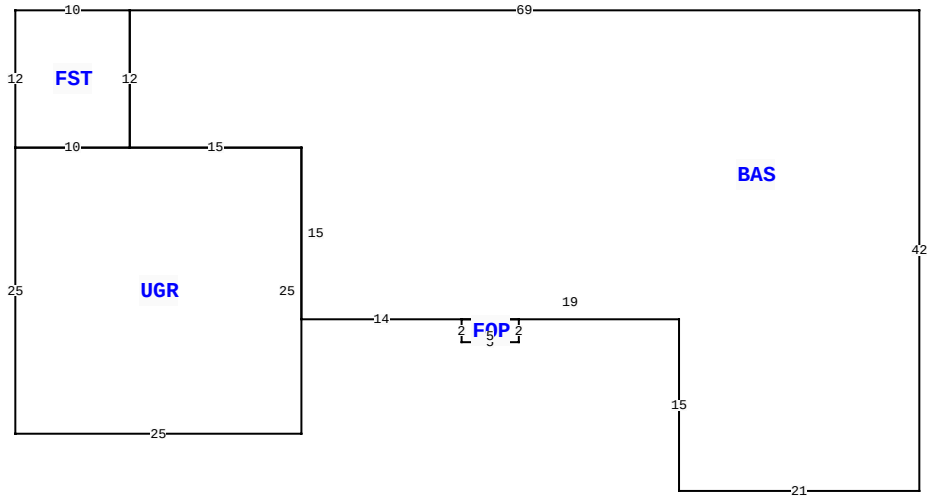

1792 NW NOEGEL RD, LAKE CITY

BLD DATE		LGL DATE	
XF DATE		LAND DATE	04/07/2025 MLU
INC DATE		AG DATE	

VALUATION SUMMARY

VALUATION BY		STANDARD
Tax Group: 3	Tax Dist:	
BUILDING MARKET VALUE		201,654
TOTAL MARKET OB/XF VALUE		750
TOTAL LAND VALUE - MARKET		90,270
TOTAL MARKET VALUE		218,641
SOH/AGL Deduction		3,675
ASSESSED VALUE		214,966
TOTAL EXEMPTION VALUE	HX HB	50,722
BASE TAXABLE VALUE		164,244
TOTAL JUST VALUE		292,674
NCON VALUE		0
INCOME VALUE		
PREVIOUS YEAR MKT VALUE		292,674

PERMIT NUM	DESCRIPTION	AMT	ISSUED
000042308	Roof Replacement	6,000	07/13/2021

SALES DATA

OFF RECORD Number	DATE	TYPE INST	Q U	V I	RSN CD	SALE PRICE
1490/1655	5/12/2023	WD	U	I	30	165,000
GRANTOR: BROWN JAMES M JR TRUS						
GRANTEE: BARRY ROY CHRISTOPH						
1378/1616	2/20/2019	QC	U	I	11	100
GRANTOR: JAMES M BROWN III TRU						
GRANTEE: JAMES M BROWN III T						

BUILDING NOTES

BUILDING DIMENSIONS

BAS= N42 W69 FST= S12 W10 N12 E 10$ S12 UGR= W10 S25 E25 N25 W15$ E15 S15 E14 FOP= S2 E5 N2 W5$ E19 S15 E21$.

EXTRA FEATURES

LN	OB/XF CODE	DESCRIPTION	BLD	CAP	L	W	UNITS	UT	Adj R	ADJ UNIT PRICE	ORIG COND	YEAR ON	YEAR ACTUAL	Q	% COND	OB/XF MKT VALUE	NOTES
1	0166	CONC,PAVMT	0	100	0	0	1.00	UT	0.00	0.00	100	0	0	3	100	225	
2	0258	PATIO	0	100	0	0	1.00	UT	0.00	0.00	100	0	0	3	100	125	
3	0296	SHED METAL	0	100	0	0	1.00	UT	0.00	0.00	100	2014	2014	3	100	400	

LAND DESCRIPTION

TOTAL OB/XF 750

LN	USE CODE	CLS	LAND USE DESCRIPTION	CAP	RD	LOC ZONE	FRONT	DEPTH	TOT LND UTS	UNIT TYPE	DT	DPTH FACT	% COND	TOT ADJ	UNIT PRICE	ADJ UNIT PRICE	LAND VALUE	OTHER ADJUSTMENTS AND NOTES	YEAR	DENSITY	DECL	FRZ	YR	CONSRV
1	0100	C	SFR	100		A-1	0.00	0.00	1.54	AC		1.00	1.00	1.00	9,000.00	9,000.00	13,860							
2	6200	A	PASTURE 3	0		A-1	0.00	0.00	8.49	AC		1.00	1.00	1.00	280.00	280.00	2,377							
3	9910	M	MKT.VAL.AG	0		A-1	0.00	0.00	8.49	AC		1.00	1.00	1.00	9,000.00	9,000.00	76,410							

REVIEW DATE 07/18/2023 BY ME Total Acres: 10.03 Total Land Value: 16,237 Market: 76,410 Agricultural: 2,377 Common: 13,860 PRINTED 11/19/2025 BY SYS