LOT 47 UNIT 5 CEDAR SPRING SHORES. 517-430, DC 1349-286,

CONN GARY G
824 SW BLUFF DR
FORT WHITE, FL 32038

2026

18-7S-16-04236-071

COLUMBIA COUNTY PROPERTY

BUILDING CHARACTERISTICS

ELEMENT	CD	CONSTRUCTION
Exterior Wall	10	ABOVE AVG. 100
Roof Structur	08	IRREGULAR 100
Roof Cover	03	COMP SHNGL 100
Interior Wall	05	DRYWALL 100
Interior Floo	14	CARPET 90
Interior Floo	08	SHT VINYL 10
Air Condition	03	CENTRAL 100
Heating Type	04	AIR DUCTED 100
Bedrooms		3 100
Bathrooms		2 100
Frame	01	NONE 100
Stories	2.	2. 100
Architectual	05	CONV 100
Units		0 100
Condition Adj	03	03 100
Kitchen Adjus	01	01 100
Quality	06	06
DOR CODE	0100	SINGLE FAMILY
MAP NUM		MKT AREA 02
NEIGHBORHOOD/LOC	18716.010	1.00/

AREA TYPE	TOTAL GROSS AREA	PCT OF BASE	YEAR	TOT ADJ AREA	SUBAREA MARKET VALUE
BAS	144	100		144	12,646
BAS	336	100		336	29,508
BAS	768	100		768	67,447
FCP	336	25		84	7,377
FEP	192	80		154	13,525
FEP	480	80		384	33,723
FOP	356	30		107	9,397
FSP	96	40		38	3,337
FSP	652	40		261	22,922
FUS	400	100		400	35,129
TOTALS	4,608			2,880	252,926

MARKET ADJUSTMENTS

TYPE	MDL	EFF. AREA	TOT ADJ PTS	EFF. BASE RATE	REPL. COST NEW	AYB	EYB	ECON	FNCT		NORM	% COND
0100	01	2,880	120.6311	135.11	389,117	1988	1988	0	0	0	35.00	65.00

1 SINGLE FAM 100% - 0 Heated Area: 1648 HX Base Yr

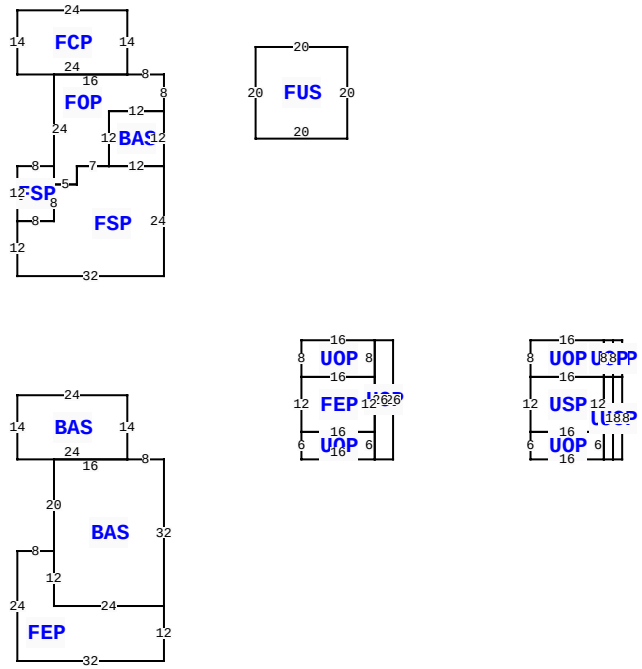

** This building has 20 Sub-Areas

824 SW BLUFF DR, FORT WHITE

BLD DATE		LGL DATE	
XF DATE		LAND DATE	
INC DATE		AG DATE	

VALUATION SUMMARY

VALUATION BY		STANDARD
Tax Group: 3	Tax Dist:	
BUILDING MARKET VALUE		252,926
TOTAL MARKET OB/XF VALUE		4,789
TOTAL LAND VALUE - MARKET		75,000
TOTAL MARKET VALUE		332,715
SOH/AGL Deduction		69,486
ASSESSED VALUE		263,229
TOTAL EXEMPTION VALUE	HX HB WR	55,722
BASE TAXABLE VALUE		207,507
TOTAL JUST VALUE		332,715
NCON VALUE		0
INCOME VALUE		
PREVIOUS YEAR MKT VALUE		332,715

PERMIT NUM	DESCRIPTION	AMT	ISSUED
14789	PUMP/UTPOL	30	12/14/1998
10950	ADDN SFR	95	03/27/1996

SALES DATA

OFF RECORD Number	DATE	TYPE INST	Q / U	V / I	RSN CD	SALE PRICE
0517/0430	7/01/1983	WD	Q	V	01	25,500
GRANTOR:						
GRANTEE:						
0468/0126	4/01/1981	WD	Q	V		25,000
GRANTOR:						
GRANTEE:						

BUILDING NOTES

BUILDING DIMENSIONS

BAS= W8 BAS= N14 W24 S14 E24$ W16 S20 FEP= W8 S24 E32 N12W24 N12$ S12 E24 N32$ PTR= N40 FSP= N24 BAS= N12 W12 S12 E12$ W12 FOP= N12 E12 N8 W8 FCP= N14 W24 S14 E24$ W16 S24 E5 N4 E7$ W7 S4 W5 FSP= N4 W8 S12 E8 N8$ S8 W8 S12 E32$ S40$ PTR= N70 E40 FUS= N20W20 S20 E20$ S70 W40$ PTR= E30 UOP= E16 UOP= E4 N26 W4 S26$ N6 FEP= N12 UOP= N8 W16 S8 E16$ W16 S12 E16$ W16 S6$ W30$ PTR= E80 UOP= E16 USP= E2 UOP= E2 N18 UOP= N8 W2 S8 E2$ W2 S18$ N18 UOP= N8 W2 S8 E2$ W2 S18$ N6 USP= N12 UOP= N8 W16 S8 E16$ W16 S12 E16$ W16 S6$ W80$.

EXTRA FEATURES

LN	OB/XF CODE	DESCRIPTION	BLD	CAP	L	W	UNITS	UT	Adj R	ADJ UNIT PRICE	ORIG COND	YEAR ON	YEAR ACTUAL	Q	% COND	OB/XF MKT VALUE	NOTES
1	0190	FPLC PF	0	100	0	0	1.00	UT	1,200.00	1,200.00	100	0	0	3	100	1,200	
2	0294	SHED WOOD/	0	100	16	20	320.00	UT	12.00	12.00	50	2008	2008	3	50	1,920	
3	0084	DOCK-RIVER	0	100	31	8	248.00	UT	14.50	14.50	20	2008	2008	3	20	719	
4	0294	SHED WOOD/	0	100	0	0	1.00	UT	0.00	0.00	100	2008	2008	3	100	200	
5	0070	CARPORT UF	0	100	0	0	1.00	UT	0.00	0.00	100	2015	2015	3	100	750	

LAND DESCRIPTION

TOTAL OB/XF 4,789

LN	USE CODE	CLS	LAND USE DESCRIPTION	CAP	RD	LOC ZONE	FRONT	DEPTH	TOT LND UTS	UNIT TYPE	DT	DPTH FACT	% COND	TOT ADJ	UNIT PRICE	ADJ UNIT PRICE	LAND VALUE	OTHER ADJUSTMENTS AND NOTES	YEAR	DENSITY	DECL	FRZ	YR	CONSRV
1	0100	C	SFR	100		A-1	0.00	0.00	100.00	FF		1.00	1.00	1.00	750.00	750.00	75,000							

REVIEW DATE 07/16/2015 BY TW Total Acres: 1.38 Total Land Value: 75,000 Market: 0 Agricultural: 0 Common: 75,000 PRINTED 11/19/2025 BY SYS