BEG SW COR OF NE1/4, N 34.85
FT TO S R/W SR 240, SE ALONG
R/W 91.42 FT TO CURVE, SE

DICKS HARRY G
1676 SE FAMILY RD
LULU, FL 32061

2025

18-5S-18-10591-001

COLUMBIA COUNTY PROPERTY

BUILDING CHARACTERISTICS

ELEMENT	CD	CONSTRUCTION
Exterior Wall	19	COMMON BRK 100
Roof Structur	03	GABLE/HIP 100
Roof Cover	03	COMP SHNGL 100
Interior Wall	04	PLYWOOD 90
Interior Wall	05	DRYWALL 10
Interior Floo	14	CARPET 100
Air Condition	03	CENTRAL 100
Heating Type	04	AIR DUCTED 100
Bedrooms		3 100
Bathrooms		2.5 100
Frame	02	WOOD FRAME 100
Stories	1.	1. 100
Architectual	05	CONV 100
Units		0 100
Condition Adj	03	03 100
Kitchen Adjus	01	01 100
Quality	05	05
DOR CODE	5000	IMPROVED AG
MAP NUM		MKT AREA 04
NEIGHBORHOOD/LOC	1518.00	1.00/

AREA TYPE	TOTAL GROSS AREA	PCT OF BASE	YEAR	TOT ADJ AREA	SUBAREA MARKET VALUE
BAS	598	100		598	47,759
BAS	1,818	100		1,818	145,196
FCP	528	25		132	10,542
FOP	120	30		36	2,875
FST	156	55		86	6,869
UCP	480	20		96	7,667
UDU	480	55		264	21,085
TOTALS	4,180			3,030	241,992

MARKET ADJUSTMENTS

TYPE	MDL	EFF. AREA	TOT ADJ PTS	EFF. BASE RATE	REPL. COST NEW	AYB	EYB	ECON	FNCT		NORM	% COND
0100	01	3,030	109.7070	122.87	372,296	1975	1975	0	0	0	35.00	65.00

1 SINGLE FAM 100% - 0 Heated Area: 2416 HX Base Yr

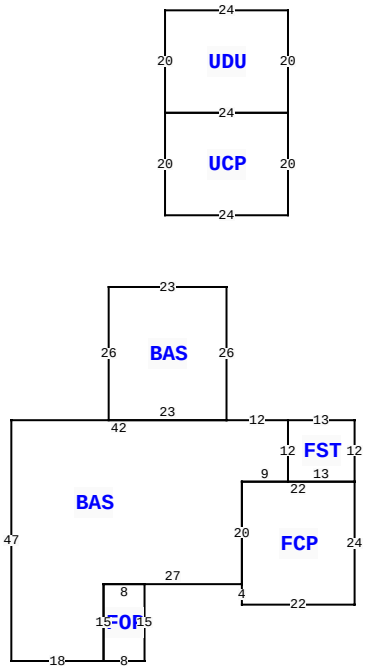

1676 SE FAMILY RD, LULU

BLD DATE		LGL DATE	
XF DATE		LAND DATE	04/29/2025 MLU
INC DATE		AG DATE	

VALUATION SUMMARY

VALUATION BY		STANDARD
Tax Group: 3	Tax Dist:	
BUILDING MARKET VALUE		241,992
TOTAL MARKET OB/XF VALUE		1,850
TOTAL LAND VALUE - MARKET		10,500
TOTAL MARKET VALUE		253,122
SOH/AGL Deduction		119,315
ASSESSED VALUE		133,807
TOTAL EXEMPTION VALUE	HX HB	50,722
BASE TAXABLE VALUE		83,085
TOTAL JUST VALUE		254,342
NCON VALUE		0
INCOME VALUE		
PREVIOUS YEAR MKT VALUE		235,717

PERMIT NUM	DESCRIPTION	AMT	ISSUED
28439	MAINT/ALTR	50	03/22/2010
24750	REMODEL	105	07/14/2006

SALES DATA

OFF RECORD Number	DATE	TYPE INST	Q U	V I	RSN CD	SALE PRICE
0338/0138	1/21/1975	WD	Q	V	01	400

GRANTOR: F J DICKS & KATHERINE
GRANTEE: HARRY G DICKS

BUILDING NOTES

BUILDING DIMENSIONS

BAS= W12 BAS= N26 W23 S26 E23$ W42 S47 E18 FOP= E8N15 W8 S15$ N15 E27 FCP= S4E22 N24 W22 S20$ N20 E9 FST= E13 N12 W13 S12$ N12$ PTR= N40 UCP= N20 UDU= N20 W24 S20 E24$ W24 S20 E24$ S40$.

EXTRA FEATURES

LN	OB/XF CODE	DESCRIPTION	BLD	CAP	L	W	UNITS	UT	Adj R	ADJ UNIT PRICE	ORIG COND	YEAR ON	YEAR ACTUAL	Q	% COND	OB/XF MKT VALUE	NOTES
1	0166	CONC,PAVMT	0	100	0	0	1.00	UT	0.00	0.00	100	0	0	3	100	150	
2	0190	FPLC PF	0	100	0	0	1.00	UT	1,200.00	1,200.00	100	0	0	3	100	1,200	
3	0285	SALVAGE	0	100	0	0	1.00	UT	0.00	0.00	100	2005	2005	3	100	100	
4	0120	CLFENCE 4	0	100	0	0	1.00	UT	0.00	0.00	100	2013	2013	3	100	300	
5	0169	FENCE/WOOD	0	100	0	0	1.00	UT	0.00	0.00	100	2015	2015	3	100	100	

LAND DESCRIPTION

TOTAL OB/XF 1,850

LN	USE CODE	CLS	LAND USE DESCRIPTION	CAP	RD	LOC ZONE	FRONT	DEPTH	TOT LND UTS	UNIT TYPE	DT	DPTH FACT	% COND	TOT ADJ	UNIT PRICE	ADJ UNIT PRICE	LAND VALUE	OTHER ADJUSTMENTS AND NOTES	YEAR	DENSITY	DECL	FRZ	YR	CONSRV
1	0100	C	SFR	100			0.00	0.00	1.00	AC		1.00	1.00	1.00	9,000.00	9,000.00	9,000							
2	6200	A	PASTURE 3	0		A-1	0.00	0.00	1.00	AC		1.00	1.00	1.00	280.00	280.00	280							
3	9910	M	MKT.VAL.AG	0			0.00	0.00	1.00	AC		1.00	1.00	1.00	1,500.00	1,500.00	1,500							

REVIEW DATE 10/05/2015 BY DF Total Acres: 2.00 Total Land Value: 9,280 Market: 1,500 Agricultural: 280 Common: 9,000 PRINTED 08/20/2025 BY SYS