LOT 55 OAKS OF LAKE CITY PHS 1.
WD 1263-1667, WD 1346-816,

NICKELSON MARK/NICKELSON MELINDA
1473 SW MANDIBA DR
LAKE CITY, FL 32024

2026

18-5S-17-09280-155

BUILDING CHARACTERISTICS

ELEMENT	CD	CONSTRUCTION
Exterior Wall	32	HARDIE BRD 100
Roof Structur	08	IRREGULAR 100
Roof Cover	03	COMP SHNGL 100
Interior Wall	05	DRYWALL 100
Interior Floo	13	LAM/VNLPLK 80
Interior Floo	15	HARDTILE 20
Air Condition	03	CENTRAL 100
Heating Type	04	AIR DUCTED 100
Bedrooms		3 100
Bathrooms		2 100
Frame	02	WOOD FRAME 100
Stories	1.	1. 100
Units		0 100
Quality	07	07
DOR CODE	0100	SINGLE FAMILY
MAP NUM		MKT AREA 02
NEIGHBORHOOD/LOC	18517.010	1.00/

AREA TYPE	TOTAL GROSS AREA	PCT OF BASE	YEAR	TOT ADJ AREA	SUBAREA MARKET VALUE
BAS	2,255	100		2,255	277,638
FGR	648	55		356	43,831
FOP	200	30		60	7,387
FOP	256	30		77	9,480
FUS	1,029	100		1,029	126,691
TOTALS	4,388			3,777	465,028

MARKET ADJUSTMENTS

TYPE	MDL	EFF. AREA	TOT ADJ PTS	EFF. BASE RATE	REPL. COST NEW	AYB	EYB	ECON	FNCT		NORM	% COND
0100	01	3,777	116.9432	130.98	494,711	2019	2019	0	0	0	6.00	94.00

1 SINGLE FAM 100% - 2020 Heated Area: 3284 HX Base Yr 2020

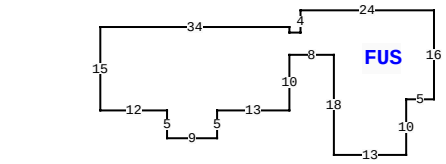

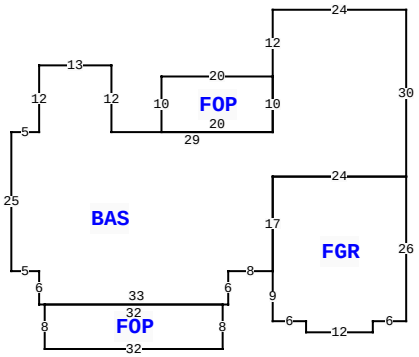

1473 SW MANDIBA DR, LAKE CITY

BLD DATE		LGL DATE	
XF DATE		LAND DATE	05/14/2024 MLU
INC DATE		AG DATE	

COLUMBIA COUNTY PROPERTY

PAGE 1 of 1 3

VALUATION SUMMARY

VALUATION BY		STANDARD
Tax Group: 3	Tax Dist:	
BUILDING MARKET VALUE		465,028
TOTAL MARKET OB/XF VALUE		4,500
TOTAL LAND VALUE - MARKET		140,000
TOTAL MARKET VALUE		609,528
SOH/AGL Deduction		300,860
ASSESSED VALUE		308,668
TOTAL EXEMPTION VALUE	HX HB	50,722
BASE TAXABLE VALUE		257,946
TOTAL JUST VALUE		609,528
NCON VALUE		0
INCOME VALUE		
PREVIOUS YEAR MKT VALUE		614,475

PERMIT NUM	DESCRIPTION	AMT	ISSUED

SALES DATA

OFF RECORD Number	DATE	TYPE INST	Q U	V I	RSN CD	SALE PRICE
1346/0816	9/28/2017	WD	Q	V	01	39,000
GRANTOR: JAMES EDWARD KNEE						
GRANTEE: MARK & MELINDA NICK						
1263/1667	9/30/2013	WD	Q	V	01	45,000
GRANTOR: OAKS OF LAKE CITY LLC						
GRANTEE: CATHERINE DOWD & JA						

BUILDING NOTES

BUILDING DIMENSIONS

BAS= W24 S12 FOP= W20 S10 E20 N10$ S10 W29 N12 W13 S12 W5 S25 E5 S6 E1 FOP= S8 E32 N8 W32$ E33 N6 E8 FGR= S9 E6 S2 E12 N2 E6 N26 W24 S17 $ N17 E24 N30$ PTR= N30 FUS= N10 E5 N16 W24 S4 W2 N1 W34 S15 E12 S5 E9 N5 E13 N10 E8 S18 E13$ S30$.

EXTRA FEATURES

LN	OB/XF CODE	DESCRIPTION	BLD	CAP	L	W	UNITS	UT	Adj R	ADJ UNIT PRICE	ORIG COND	YEAR ON	YEAR ACTUAL	Q	% COND	OB/XF MKT VALUE	NOTES
1	0166	CONC,PAVMT	0	100	0	0	1.00	UT	0.00	0.00	100	2019	2019	3	100	4,500	

LAND DESCRIPTION

TOTAL OB/XF 4,500

LN	USE CODE	CLS	LAND USE DESCRIPTION	CAP	RD	LOC ZONE	FRONT	DEPTH	TOT LND UTS	UNIT TYPE	DT	DPTH FACT	% COND	TOT ADJ	UNIT PRICE	ADJ UNIT PRICE	LAND VALUE	OTHER ADJUSTMENTS AND NOTES	YEAR	DENSITY	DECL	FRZ	YR	CONSRV
1	0100	C	SFR	100		PRD	0.00	0.00	1.00	LT		1.00	1.00	1.00	140,000.00	140,000.00	140,000							

REVIEW DATE 12/30/2019 BY HC Total Acres: 4.49 Total Land Value: 140,000 Market: 0 Agricultural: 0 Common: 140,000 PRINTED 10/02/2025 BY SYS