LOTS 32 & 33 OAKS OF LAKE CITY P
WD 1243-1991, WD 1316-2767, WD 1

QUINTANA SALVADOR JR/HEWETT-QUINTANA BEVERLY D
989 SW MANDIBA DRIVE
LAKE CITY, FL 32024

2026

18-5S-17-09280-133

COLUMBIA COUNTY PROPERTY

BUILDING CHARACTERISTICS

ELEMENT	CD	CONSTRUCTION
Exterior Wall	32	HARDIE BRD 100
Roof Structur	03	GABLE/HIP 100
Roof Cover	03	COMP SHNGL 100
Interior Wall	05	DRYWALL 100
Interior Floo	15	HARDTILE 80
Interior Floo	14	CARPET 20
Air Condition	03	CENTRAL 100
Heating Type	04	AIR DUCTED 100
Bedrooms		3 100
Bathrooms		2 100
Frame	02	WOOD FRAME 100
Stories	1.	1. 100
Architectual	05	CONV 100
Units		0 100
Quality	07	07

DOR CODE 0100 SINGLE FAMILY
MAP NUM | MKT AREA 02
NEIGHBORHOOD/LOC 18517.010 1.00/

AREA TYPE	TOTAL GROSS AREA	PCT OF BASE	YEAR	TOT ADJ AREA	SUBAREA MARKET VALUE
BAS	2,151	100		2,151	257,432
FGR	532	55		293	35,066
FOP	151	30		45	5,386
FSP	320	40		128	15,319
UDG	1,760	55		968	115,850
TOTALS	4,914			3,585	429,053

MARKET ADJUSTMENTS

TYPE	MDL	EFF. AREA	TOT ADJ PTS	EFF. BASE RATE	REPL. COST NEW	AYB	EYB	ECON	FNCT		NORM	% COND
0100	01	3,585	121.4290	136.00	487,560	2013	2013	0	0	0	12.00	88.00

1 SINGLE FAM 100% - 2017 Heated Area: 2151 HX Base Yr 2017

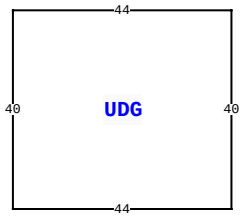

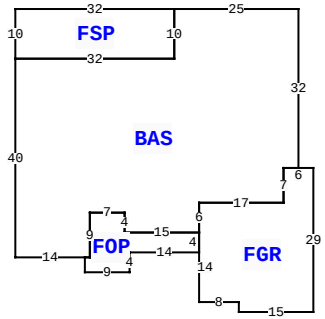

989 SW MANDIBA DR, LAKE CITY

BLD DATE		LGL DATE	
XF DATE		LAND DATE	05/14/2024 MLU
INC DATE		AG DATE	

COLUMBIA COUNTY PROPERTY — VALUATION SUMMARY

VALUATION BY		STANDARD
Tax Group: 3	Tax Dist:	
BUILDING MARKET VALUE		429,053
TOTAL MARKET OB/XF VALUE		4,390
TOTAL LAND VALUE - MARKET		88,000
TOTAL MARKET VALUE		521,443
SOH/AGL Deduction		188,915
ASSESSED VALUE		332,528
TOTAL EXEMPTION VALUE	HX HB	50,722
BASE TAXABLE VALUE		281,806
TOTAL JUST VALUE		521,443
NCON VALUE		0
INCOME VALUE		
PREVIOUS YEAR MKT VALUE		526,318

PERMIT NUM	DESCRIPTION	AMT	ISSUED
34378	GARAGE	368	08/23/2016
30596	SFR	922	11/13/2012

SALES DATA

OFF RECORD Number	DATE	TYPE INST	Q U	V I	RSN CD	SALE PRICE
1318/1369	7/13/2016	WD	Q	I	04	24,900
GRANTOR: OAKS OF LAKE CITY LLC						
GRANTEE: SALVADOR QUINTANA &						
1316/2767	6/16/2016	WD	Q	I	04	286,000
GRANTOR: MICHAEL H & DIANE B C						
GRANTEE: SALVADOR QUINTANA &						

BUILDING NOTES

BUILDING DIMENSIONS

BAS= W25 FSP= W32 S10 E32 N10$ S10 W32 S40 E14 FOP= S3 E9 N4 E14 N4 W15 N4 W7 S9 W1$ E1 N9 E7 S4 E15 FGR= S14 E8 S2 E15 N29 W6 S7 W17 S6$ N6 E17 N7 E3 N32$ PTR= N30 UDG= N40 W44 S40 E44$ S30$.

EXTRA FEATURES

LN	OB/XF CODE	DESCRIPTION	BLD	CAP	L	W	UNITS	UT	Adj R	ADJ UNIT PRICE	ORIG COND	YEAR ON	YEAR ACTUAL	Q	% COND	OB/XF MKT VALUE	NOTES
1	0166	CONC,PAVMT	0	100	0	0	972.00	UT	2.00	2.00	90	2013	2013	3	90	1,750	
2	0166	CONC,PAVMT	0	100	30	44	1,320.00	UT	2.00	2.00	100	2016	2016	3	100	2,640	

LAND DESCRIPTION

TOTAL OB/XF 4,390

LN	USE CODE	CLS	LAND USE DESCRIPTION	CAP	RD	LOC ZONE	FRONT	DEPTH	TOT LND UTS	UNIT TYPE	DT	DPTH FACT	% COND	TOT ADJ	UNIT PRICE	ADJ UNIT PRICE	LAND VALUE	OTHER ADJUSTMENTS AND NOTES	YEAR	DENSITY	DECL	FRZ	YR	CONSRV
1	0100	C	SFR	100		PRD	0.00	0.00	2.00	LT		1.00	1.00	0.80	55,000.00	44,000.00	88,000							

REVIEW DATE 08/30/2017 BY BC Total Acres: 2.02 Total Land Value: 88,000 Market: 0 Agricultural: 0 Common: 88,000 PRINTED 10/02/2025 BY SYS