COMM SE COR OF N1/2 OF N1/2 OF S
N 432.23 FT FOR POB, W489.91 FT,
FT, E 495 FT, S 922.71 FT FOR PO

NELSON ANDREW T/NELSON ROBERT A
633 SW MOONSHADOW GLN
LAKE CITY, FL 32025

2026

18-4S-17-08481-000

COLUMBIA COUNTY PROPERTY

BUILDING CHARACTERISTICS

ELEMENT	CD	CONSTRUCTION
Exterior Wall	19	COMMON BRK 100
Roof Structur	03	GABLE/HIP 100
Roof Cover	03	COMP SHNGL 100
Interior Wall	05	DRYWALL 100
Interior Floo	14	CARPET 80
Interior Floo	06	VINYL ASB 20
Air Condition	03	CENTRAL 100
Heating Type	04	AIR DUCTED 100
Bedrooms		5 100
Bathrooms		3 100
Frame	01	NONE 100
Stories	2.	2. 100
Architectual	05	CONV 100
Units		0 100
Condition Adj	02	02 100
Kitchen Adjus	01	01 100
Quality	05	05
DOR CODE	5000	IMPROVED AG
MAP NUM		MKT AREA 06
NEIGHBORHOOD/LOC	18417.00	1.00/

AREA TYPE	TOTAL GROSS AREA	PCT OF BASE	YEAR	TOT ADJ AREA	SUBAREA MARKET VALUE
BAS	3,108	100		3,108	224,000
FGR	504	55		277	19,964
FOP	295	30		88	6,342
FSP	878	40		351	25,297
FUS	2,207	100		2,207	159,063
TOTALS	6,992			6,031	434,666

MARKET ADJUSTMENTS

TYPE	MDL	EFF. AREA	TOT ADJ PTS	EFF. BASE RATE	REPL. COST NEW	AYB	EYB	ECON	FNCT		NORM	% COND
0100	01	6,031	98.9982	110.88	668,717	1971	1971	0	0	0	35.00	65.00

1 SINGLE FAM 100% - 2016 Heated Area: 5315 HX Base Yr 2016

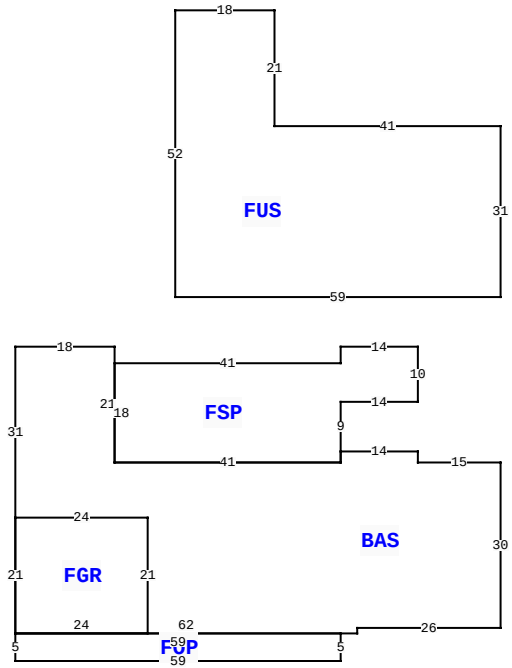

633 SW MOONSHADOW GLN, LAKE CITY

BLD DATE		LGL DATE	
XF DATE		LAND DATE	04/09/2025 MLU
INC DATE		AG DATE	

VALUATION SUMMARY

VALUATION BY		STANDARD
Tax Group: 2	Tax Dist:	
BUILDING MARKET VALUE		434,666
TOTAL MARKET OB/XF VALUE		23,617
TOTAL LAND VALUE - MARKET		82,532
TOTAL MARKET VALUE		469,573
SOH/AGL Deduction		196,829
ASSESSED VALUE		272,744
TOTAL EXEMPTION VALUE	HX HB	50,722
BASE TAXABLE VALUE		222,022
TOTAL JUST VALUE		540,815
NCON VALUE		0
INCOME VALUE		
PREVIOUS YEAR MKT VALUE		540,815

PERMIT NUM	DESCRIPTION	AMT	ISSUED
12441	SFR	420	04/23/1997

SALES DATA

OFF RECORD Number	DATE	TYPE INST	Q U	V I	RSN CD	SALE PRICE
1385/1436	5/24/2019	WD	U	I	30	100
GRANTOR: ANDREW T NELSON						
GRANTEE: ANDREW T NELSON & R						
1385/1434	5/20/2019	WD	U	I	11	100
GRANTOR: RACHEL VANN NELSON						
GRANTEE: ANDREW T NELSON						

BUILDING NOTES

BUILDING DIMENSIONS

BAS= W15 N2 W14 FSP= N9 E14 N10 W14 S3 W41 S18 E41 N2$ S2 W41 N21 W18 S31 FGR= E24 S21 W24 N21$ S21 FOP= S5 E59 N5 W59$ E62 N1 E26 N30$ PTR=N30 FUS= N31 W41 N21 W18 S52 E59$S30$.

EXTRA FEATURES

LN	OB/XF CODE	DESCRIPTION	BLD	CAP	L	W	UNITS	UT	Adj R	ADJ UNIT PRICE	ORIG COND	YEAR ON	YEAR ACTUAL	Q	% COND	OB/XF MKT VALUE	NOTES
1	0190	FPLC PF	0	100	0	0	1.00	UT	1,200.00	1,200.00	100	0	0	3	100	1,200	
2	0280	POOL R/CON	0	100	16	32	512.00	UT	70.00	70.00	100	1971	1971	3	40	14,336	
3	0070	CARPORT UF	0	100	21	24	504.00	UT	3.30	3.30	100	0	0	3	100	1,663	
4	0070	CARPORT UF	0	100	24	36	864.00	UT	2.50	2.50	100	0	0	3	100	2,160	
5	0210	GARAGE U	0	100	24	24	576.00	UT	3.40	3.40	100	0	0	3	100	1,958	
6	0260	PAVEMENT-A	0	100	0	0	1.00	UT	0.00	0.00	100	0	0	3	100	2,000	
7	0169	FENCE/WOOD	0	100	0	0	1.00	UT	0.00	0.00	100	2013	2013	3	100	300	

LAND DESCRIPTION

TOTAL OB/XF 23,617

LN	USE CODE	CLS	LAND USE DESCRIPTION	CAP	RD	LOC ZONE	FRONT	DEPTH	TOT LND UTS	UNIT TYPE	DT	DPTH FACT	% COND	TOT ADJ	UNIT PRICE	ADJ UNIT PRICE	LAND VALUE	OTHER ADJUSTMENTS AND NOTES	YEAR	DENSITY	DECL	FRZ	YR	CONSRV
1	0100	C	SFR	100		A-1	0.00	0.00	2.00	AC		1.00	1.00	1.00	4,500.00	4,500.00	9,000							
2	6200	A	PASTURE 3	0		A-1	0.00	0.00	8.17	AC		1.00	1.00	1.00	280.00	280.00	2,288							
3	9910	M	MKT.VAL.AG	0		A-1	0.00	0.00	8.17	AC		1.00	1.00	1.00	9,000.00	9,000.00	73,530							
4	9400	C	RIGHTOFWAY	0		A-1	60.00	140.00	0.19	AC		1.00	1.00	1.00	10.00	10.00	2							

REVIEW DATE 05/11/2017 BY BC Total Acres: 10.36 Total Land Value: 11,290 Market: 73,530 Agricultural: 2,288 Common: 9,002 PRINTED 11/07/2025 BY SYS