COMM AT SE COR SEC, RUN N
1417.87 FT, W 577 FT, N 768.50
FT FOR POB, RUN W 200 FT, N

WOODLEY JOHN R JR/WOODLEY KATIE
431 SW HUDSON LN
LAKE CITY, FL 32025

2026

18-4S-17-08479-112

COLUMBIA COUNTY PROPERTY

BUILDING CHARACTERISTICS

ELEMENT	CD	CONSTRUCTION
Exterior Wall	32	HARDIE BRD 100
Roof Structur	03	GABLE/HIP 100
Roof Cover	03	COMP SHNGL 100
Interior Wall	05	DRYWALL 100
Interior Floo	15	HARDTILE 80
Interior Floo	14	CARPET 20
Air Condition	03	CENTRAL 100
Heating Type	04	AIR DUCTED 100
Bedrooms		3 100
Bathrooms		3 100
Frame	02	WOOD FRAME 100
Stories	1.	1. 100
Architectual	05	CONV 100
Units		0 100
Quality	05	05

DOR CODE 0100 SINGLE FAMILY
MAP NUM | MKT AREA 06
NEIGHBORHOOD/LOC 18417.030 1.00/

AREA TYPE	TOTAL GROSS AREA	PCT OF BASE	YEAR	TOT ADJ AREA	SUBAREA MARKET VALUE
BAS	2,885	100		2,885	295,003
FGR	722	55		397	40,595
FOP	695	30		208	21,269
FOP	790	30		237	24,234
FST	154	55		85	8,692
UST	532	45		239	24,438
TOTALS	5,778			4,051	414,231

MARKET ADJUSTMENTS

TYPE	MDL	EFF. AREA	TOT ADJ PTS	EFF. BASE RATE	REPL. COST NEW	AYB	EYB	ECON	FNCT		NORM	% COND
0100	01	4,051	111.3400	124.70	505,160	2007	2007	0	0	0	18.00	82.00

1 SINGLE FAM 100% - 2011 Heated Area: 2885 HX Base Yr 2011

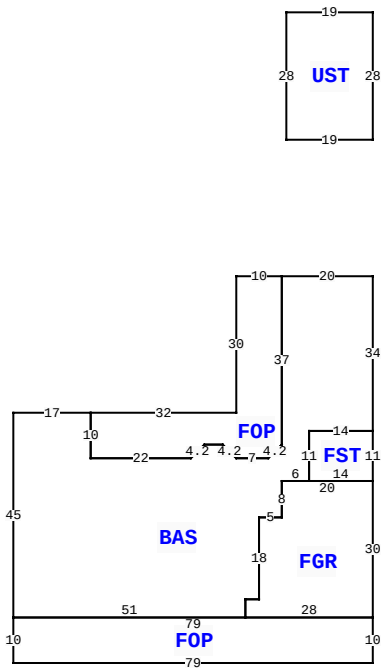

431 SW HUDSON LN, LAKE CITY

BLD DATE		LGL DATE	
XF DATE		LAND DATE	04/21/2023 MLU
INC DATE		AG DATE	

VALUATION SUMMARY

VALUATION BY		STANDARD
Tax Group: 2	Tax Dist:	
BUILDING MARKET VALUE		414,231
TOTAL MARKET OB/XF VALUE		37,118
TOTAL LAND VALUE - MARKET		22,500
TOTAL MARKET VALUE		473,849
SOH/AGL Deduction		148,282
ASSESSED VALUE		325,567
TOTAL EXEMPTION VALUE	HX HB	50,722
BASE TAXABLE VALUE		274,845
TOTAL JUST VALUE		473,849
NCON VALUE		0
INCOME VALUE		
PREVIOUS YEAR MKT VALUE		480,156

PERMIT NUM	DESCRIPTION	AMT	ISSUED
25162	POOL	150	10/27/2006
25161	SFR	997	10/25/2006

SALES DATA

OFF RECORD Number	DATE	TYPE INST	Q U	V I	RSN CD	SALE PRICE
1194/0718	5/12/2010	WD	Q	I	01	260,000
GRANTOR: DAVID & JENNIFER MILL						
GRANTEE: JOHN R WOODLEY JR &						
1083/2149	5/10/2006	WD	U	V	09	48,000
GRANTOR: STANLEY BATTEN & MARK						
GRANTEE: DAVID & JENNIFER MI						

BUILDING NOTES

BUILDING DIMENSIONS

BAS= W20 FOP= W10 S30 W32 S10 E22 R3 U3 E4 D3 R3 E7 R3 U3 N37$ S37 D3 L3 W7 L3 U3 W4 D3 L3 W22 N10 W17 S45 FOP= S10 E79 N10 W79$ E51 FGR= E28 N30 W20 S8 W5 S18 W3 S4$ N4 E3 N18 E5 N8 E6 FST= E14 N11 W14 S11$ N11 E14 N34$ PTR= N30 UST= N28 W19 S28 E19$ S30$.

EXTRA FEATURES

LN	OB/XF CODE	DESCRIPTION	BLD	CAP	L	W	UNITS	UT	Adj R	ADJ UNIT PRICE	ORIG COND	YEAR ON	YEAR ACTUAL	Q	% COND	OB/XF MKT VALUE	NOTES
1	0190	FPLC PF	0	100	0	0	1.00	UT	1,200.00	1,200.00	100	2007	2007	3	100	1,200	
2	0280	POOL R/CON	0	100	14	32	448.00	UT	70.00	70.00	100	2007	2007	3	54	16,934	
3	0166	CONC,PAVMT	0	100	0	0	1,732.00	UT	3.00	3.00	100	2007	2007	3	100	5,196	
4	0169	FENCE/WOOD	0	100	0	0	168.00	UT	13.50	13.50	100	2007	2007	3	100	2,268	
5	0210	GARAGE U	0	100	18	40	720.00	UT	16.00	16.00	100	2013	2013	3	100	11,520	

LAND DESCRIPTION

TOTAL OB/XF 37,118

LN	USE CODE	CLS	LAND USE DESCRIPTION	CAP	RD	LOC ZONE	FRONT	DEPTH	TOT LND UTS	UNIT TYPE	DT	DPTH FACT	% COND	TOT ADJ	UNIT PRICE	ADJ UNIT PRICE	LAND VALUE	OTHER ADJUSTMENTS AND NOTES	YEAR	DENSITY	DECL	FRZ	YR	CONSRV
1	0100	C	SFR	100			0.00	0.00	1.00	LT		1.00	1.00	1.00	22,500.00	22,500.00	22,500							

REVIEW DATE 05/11/2017 BY BC Total Acres: 1.01 Total Land Value: 22,500 Market: 0 Agricultural: 0 Common: 22,500 PRINTED 11/10/2025 BY SYS