COMM SE COR OF SEC, RUN N 776.60
W 1373.72 FT, N 357.45 FT FOR PO
N 248.25 FT MOL, W 1200.63 FT TO

NULL LINDA KIMMICK
2503 SW SR 47
LAKE CITY, FL 32025

2026

18-4S-17-08479-000

COLUMBIA COUNTY PROPERTY

BUILDING CHARACTERISTICS

ELEMENT	CD	CONSTRUCTION
Exterior Wall	19	COMMON BRK 100
Roof Structur	03	GABLE/HIP 100
Roof Cover	03	COMP SHNGL 100
Interior Wall	05	DRYWALL 100
Interior Floo	06	VINYL ASB 90
Interior Floo	14	CARPET 10
Air Condition	03	CENTRAL 100
Heating Type	03	FORCED AIR 100
Bedrooms		2 100
Bathrooms		1 100
Frame	01	NONE 100
Stories	1.	1. 100
Architectual	05	CONV 100
Units		0 100
Condition Adj	02	02 100
Kitchen Adjus	01	01 100
Quality	05	05
DOR CODE	0100	SINGLE FAMILY
MAP NUM		MKT AREA 06
NEIGHBORHOOD/LOC	18417.00	1.00/

AREA TYPE	TOTAL GROSS AREA	PCT OF BASE	YEAR	TOT ADJ AREA	SUBAREA MARKET VALUE
BAS	280	100		280	18,240
BAS	1,696	100		1,696	110,482
FEP	110	80		88	5,732
FGR	315	55		173	11,270
FOP	24	30		7	456
FOP	120	30		36	2,345
UST	105	45		47	3,062
TOTALS	2,650			2,327	151,588

MARKET ADJUSTMENTS

TYPE	MDL	EFF. AREA	TOT ADJ PTS	EFF. BASE RATE	REPL. COST NEW	AYB	EYB	ECON	FNCT		NORM	% COND
0100	01	2,327	89.4825	100.22	233,212	1950	1950	0	0	0	35.00	65.00

1 SINGLE FAM 100% - 1996 Heated Area: 1976 HX Base Yr 1996

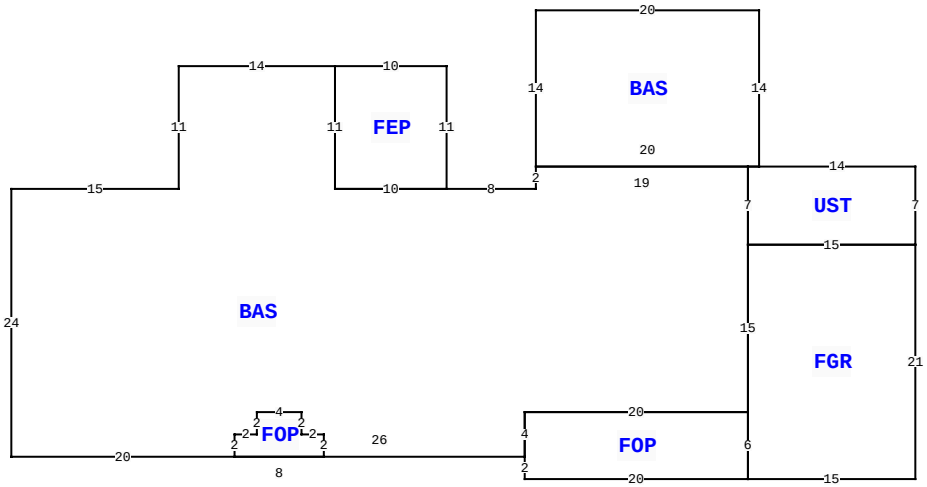

2503 SW STATE ROAD 47 , LAKE CITY

BLD DATE		LGL DATE	
XF DATE		LAND DATE	
INC DATE		AG DATE	

VALUATION SUMMARY

VALUATION BY		STANDARD
Tax Group: 2	Tax Dist:	
BUILDING MARKET VALUE		151,588
TOTAL MARKET OB/XF VALUE		1,750
TOTAL LAND VALUE - MARKET		89,200
TOTAL MARKET VALUE		242,538
SOH/AGL Deduction		139,662
ASSESSED VALUE		102,876
TOTAL EXEMPTION VALUE	HX HB	50,722
BASE TAXABLE VALUE		52,154
TOTAL JUST VALUE		242,538
NCON VALUE		0
INCOME VALUE		
PREVIOUS YEAR MKT VALUE		242,538

SALE:1:1: 16.83 AC

PERMIT NUM	DESCRIPTION	AMT	ISSUED
000050671	Roof Replacement	8,000	08/27/2024
8007	M H	125	01/25/1994

SALES DATA

OFF RECORD Number	DATE	TYPE INST	Q U	V I	RSN CD	SALE PRICE
0834/0954	1/29/1997	WD	Q	I	03	100

GRANTOR: CAROL KIMMICK GASKINS
GRANTEE: LINDA KIMMICK NULL

BUILDING NOTES

BUILDING DIMENSIONS

BAS= W19 S2 W8 FEP= N11 W10 S11 E10$ W10 N11 W14 S11 W15 S24 E20 FOP= N2 E2 N2 E4 S2 E2 S2 W8$ E26 FOP= S2 E20 N6 W20 S4$ N4 E20 FGR= S6 E15 N21 W15 S15$N15 UST= E15 N7 W14 BAS= N14 W20 S14 E20$ W1 S7$ N7$.

EXTRA FEATURES

LN	OB/XF CODE	DESCRIPTION	BLD	CAP	L	W	UNITS	UT	Adj R	ADJ UNIT PRICE	ORIG COND	YEAR ON	YEAR ACTUAL	Q	% COND	OB/XF MKT VALUE	NOTES
1	0190	FPLC PF	0	100	0	0	1.00	UT	1,200.00	1,200.00	100	0	0	3	100	1,200	
2	0296	SHED METAL	0	100	0	0	1.00	UT	0.00	0.00	100	2013	2013	3	100	50	
3	0285	SALVAGE	0	100	0	0	1.00	UT	0.00	0.00	100	2013	2013	3	100	500	

LAND DESCRIPTION

TOTAL OB/XF 1,750

LN	USE CODE	CLS	LAND USE DESCRIPTION	CAP	RD	LOC ZONE	FRONT	DEPTH	TOT LND UTS	UNIT TYPE	DT	DPTH FACT	% COND	TOT ADJ	UNIT PRICE	ADJ UNIT PRICE	LAND VALUE	OTHER ADJUSTMENTS AND NOTES	YEAR	DENSITY	DECL	FRZ	YR	CONSRV
1	0100	C	SFR	100		RSF-1	0.00	0.00	1.00	AC		1.00	1.00	0.50	20,000.00	10,000.00	10,000							
2	0000	C	VAC RES	100		RSF-1	0.00	0.00	7.92	AC		1.00	1.00	0.50	20,000.00	10,000.00	79,200							

REVIEW DATE 09/19/2024 BY JS Total Acres: 8.92 Total Land Value: 89,200 Market: 0 Agricultural: 0 Common: 89,200 PRINTED 10/07/2025 BY SYS