LOT 7 CENTURY ESTATES.
411-601, 686-681, 884-2077, 1103

CARREA STEVE
361 SW BRODERICK DR
LAKE CITY, FL 32025

2025

18-4S-17-08467-008

COLUMBIA COUNTY PROPERTY

BUILDING CHARACTERISTICS

ELEMENT	CD	CONSTRUCTION
Exterior Wall	19	COMMON BRK 70
Exterior Wall	31	VINYL SID 30
Roof Structur	03	GABLE/HIP 100
Roof Cover	03	COMP SHNGL 100
Interior Wall	05	DRYWALL 100
Interior Floo	14	CARPET 80
Interior Floo	06	VINYL ASB 20
Air Condition	03	CENTRAL 100
Heating Type	04	AIR DUCTED 100
Bedrooms		3 100
Bathrooms		2 100
Frame	01	NONE 100
Stories	1.	1. 100
Architectual	05	CONV 100
Units		0 100
Condition Adj	03	03 100
Kitchen Adjus	01	01 100
Quality	05	05
DOR CODE	0100	SINGLE FAMILY
MAP NUM		MKT AREA 06
NEIGHBORHOOD/LOC	18417.020	1.00/

AREA TYPE	TOTAL GROSS AREA	PCT OF BASE	YEAR	TOT ADJ AREA	SUBAREA MARKET VALUE
BAS	2,223	100		2,223	170,273
FGR	600	55		330	25,277
FOP	112	30		34	2,605
FOP	168	30		50	3,830
FSP	104	40		42	3,217
TOTALS	3,207			2,679	205,200

MARKET ADJUSTMENTS

TYPE	MDL	EFF. AREA	TOT ADJ PTS	EFF. BASE RATE	REPL. COST NEW	AYB	EYB	ECON	FNCT		NORM	% COND
0100	01	2,679	105.2160	117.84	315,693	1978	1978	0	0	0	35.00	65.00

1 SINGLE FAM – 100% - 2011 Heated Area: 2223 HX Base Yr 2011

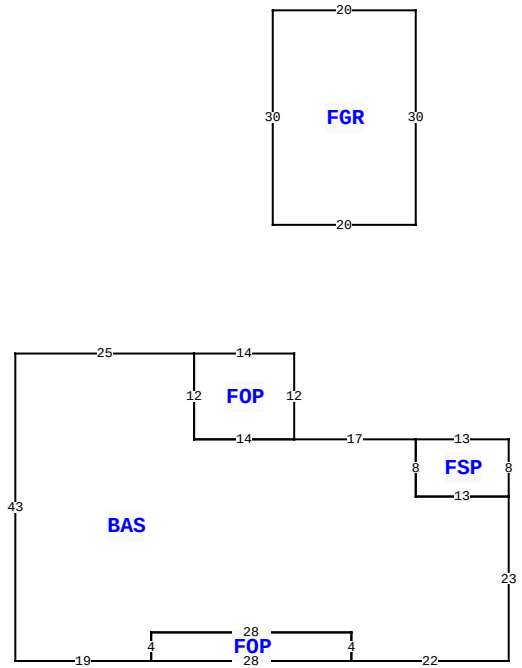

361 SW BRODERICK DR, LAKE CITY

BLD DATE		LGL DATE	
XF DATE		LAND DATE	04/03/2025 MLU
INC DATE		AG DATE	

VALUATION SUMMARY

VALUATION BY		STANDARD
Tax Group: 2	Tax Dist:	
BUILDING MARKET VALUE		205,200
TOTAL MARKET OB/XF VALUE		3,200
TOTAL LAND VALUE - MARKET		35,000
TOTAL MARKET VALUE		243,400
SOH/AGL Deduction		110,233
ASSESSED VALUE		133,167
TOTAL EXEMPTION VALUE	HX HB DX	55,722
BASE TAXABLE VALUE		77,445
TOTAL JUST VALUE		243,400
NCON VALUE		0
INCOME VALUE		
PREVIOUS YEAR MKT VALUE		225,584

PERMIT NUM	DESCRIPTION	AMT	ISSUED

SALES DATA

OFF RECORD Number	DATE	TYPE INST	Q U	V I	RSN CD	SALE PRICE
1207/1352	12/28/2010	WD	Q	I	01	120,000
GRANTOR: WILBUR PAUL AS TRUSTE						
GRANTEE: STEVE CARREA						
1205/0566	11/18/2010	WD	U	I	11	0
GRANTOR: WILBUR PAUL						
GRANTEE: WILBUR PAUL AS TRUS						

BUILDING NOTES

BUILDING DIMENSIONS

BAS= W17 FOP= N12 W14 S12 E14$ W14 N12 W25 S43 E19 FOP= E28 N4 W28 S4$ N4 E28 S4E22 N23 FSP= N8 W13 S8 E13$ W13 N8$ PTR=N30 FGR= N30 W20 S30 E20$ S30$.

EXTRA FEATURES

LN	OB/XF CODE	DESCRIPTION	BLD	CAP	L	W	UNITS	UT	Adj R	ADJ UNIT PRICE	ORIG COND	YEAR ON	YEAR ACTUAL	Q	% COND	OB/XF MKT VALUE	NOTES
1	0166	CONC,PAVMT	0	100	0	0	1.00	UT	0.00	0.00	100	0	0	3	100	2,000	
2	0190	FPLC PF	0	100	0	0	1.00	UT	1,200.00	1,200.00	100	0	0	3	100	1,200	

LAND DESCRIPTION

TOTAL OB/XF 3,200

LN	USE CODE	CLS	LAND USE DESCRIPTION	CAP	RD	LOC ZONE	FRONT	DEPTH	TOT LND UTS	UNIT TYPE	DT	DPTH FACT	% COND	TOT ADJ	UNIT PRICE	ADJ UNIT PRICE	LAND VALUE	OTHER ADJUSTMENTS AND NOTES	YEAR	DENSITY	DECL	FRZ	YR	CONSRV
1	0100	C	SFR	100		RSF-1	0.00	0.00	1.00	LT		1.00	1.00	1.00	35,000.00	35,000.00	35,000							

REVIEW DATE 05/10/2017 BY BC Total Acres: 1.00 Total Land Value: 35,000 Market: 0 Agricultural: 0 Common: 35,000 PRINTED 06/20/2025 BY SYS