COMM NW COR OF NE 1/4, RUN E
399.83 FT, SE 520.70 FT, S
46.73 FT FOR POB, E 787.04 FT,

COX STANLEY C/COX L ANGELA
869 NW WOODLANDS TERR
LAKE CITY, FL 32055

2026

18-3S-16-02177-112

COLUMBIA COUNTY PROPERTY

BUILDING CHARACTERISTICS

ELEMENT	CD	CONSTRUCTION
Exterior Wall	19	COMMON BRK 100
Roof Structur	08	IRREGULAR 100
Roof Cover	12	MODULAR MT 100
Interior Wall	05	DRYWALL 100
Interior Floo	14	CARPET 90
Interior Floo	15	HARDTILE 10
Air Condition	03	CENTRAL 100
Heating Type	04	AIR DUCTED 100
Bedrooms		3 100
Bathrooms		2 100
Frame	02	WOOD FRAME 100
Stories	1.	1. 100
Architectual	05	CONV 100
Units		0 100
Condition Adj	03	03 100
Kitchen Adjus	01	01 100
Quality	07	07
DOR CODE	0100	SINGLE FAMILY
MAP NUM		MKT AREA 01
NEIGHBORHOOD/LOC	18316.010	1.00/

AREA TYPE	TOTAL GROSS AREA	PCT OF BASE	YEAR	TOT ADJ AREA	SUBAREA MARKET VALUE
BAS	505	100		505	55,559
BAS	1,652	100		1,652	181,749
FOP	70	30		21	2,310
FOP	150	30		45	4,951
FSP	168	40		67	7,371
UCP	600	20		120	13,202
UDU	384	55		211	23,213
TOTALS	3,529			2,621	288,356

MARKET ADJUSTMENTS

TYPE	MDL	EFF. AREA	TOT ADJ PTS	EFF. BASE RATE	REPL. COST NEW	AYB	EYB	ECON	FNCT		NORM	% COND
0100	01	2,621	129.2522	144.76	379,416	2001	2001	0	0	0	24.00	76.00

1 SINGLE FAM 100% - 2002 Heated Area: 2157 HX Base Yr 2002

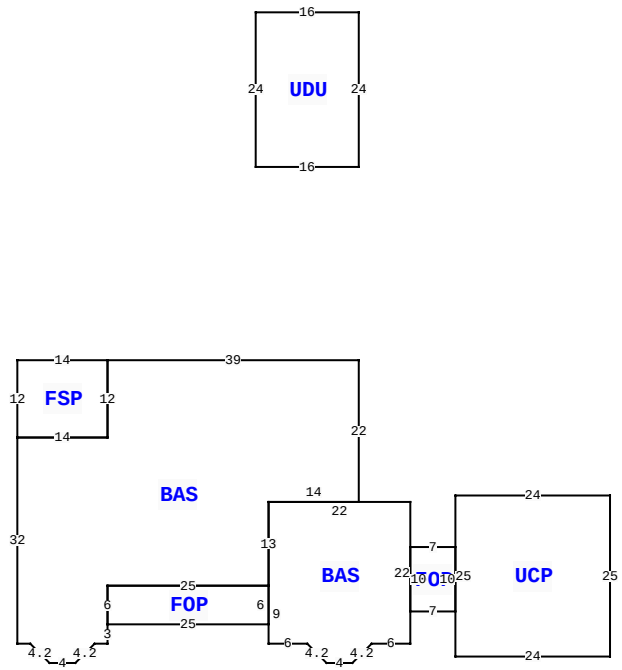

869 NW WOODLANDS TER, LAKE CITY

BLD DATE		LGL DATE	
XF DATE		LAND DATE	04/07/2025 MLU
INC DATE		AG DATE	

VALUATION SUMMARY

VALUATION BY		STANDARD
Tax Group: 3	Tax Dist:	
BUILDING MARKET VALUE		288,356
TOTAL MARKET OB/XF VALUE		27,246
TOTAL LAND VALUE - MARKET		81,081
TOTAL MARKET VALUE		396,683
SOH/AGL Deduction		151,996
ASSESSED VALUE		244,687
TOTAL EXEMPTION VALUE	HX HB	50,722
BASE TAXABLE VALUE		193,965
TOTAL JUST VALUE		396,683
NCON VALUE		0
INCOME VALUE		
PREVIOUS YEAR MKT VALUE		401,974

SALE:1:1: 10.41 AC

PERMIT NUM	DESCRIPTION	AMT	ISSUED
40073	ADDN SFR	0	07/01/2020
18252	SFR	282	05/08/2001

SALES DATA

OFF RECORD Number	DATE	TYPE INST	Q U	V I	RSN CD	SALE PRICE
0939/2375	10/17/2001	WD	Q	V	03	100
GRANTOR: G RICHARDSON						
GRANTEE: STANLEY & ANGELA CO						
0914/1596	11/17/2000	WD	Q	V		30,000
GRANTOR: G RICHARDSON						
GRANTEE: STANLEY & ANGELA CO						

BUILDING NOTES

BUILDING DIMENSIONS

BAS=[ORIG=0,0] W39 S12 W14 S32 E2 D3R3 E4 U3R3 E2 N3 N6 E25 N13 E14 N22 $
UCP=[ORIG=15,21] E24 S25 W24 N25 $
BAS=[ORIG=-14,35] S9 E6 D3R3 E4 U3R3 E6 N22 W22 S13 $
UDU=[ORIG=0,-30] N24 W16 S24 E16 $
FSP=[ORIG=-39,0] W14 S12 E14 N12 $
FOP=[ORIG=-39,41] E25 N6 W25 S6 $
FOP=[ORIG=8,29] E7 S10 W7 N10 $.

EXTRA FEATURES

LN	OB/XF CODE	DESCRIPTION	BLD	CAP	L	W	UNITS	UT	Adj R	ADJ UNIT PRICE	ORIG COND	YEAR ON	YEAR ACTUAL	Q	% COND	OB/XF MKT VALUE	NOTES
1	0190	FPLC PF	0	100	0	0	1.00	UT	1,200.00	1,200.00	100	2001	2001	3	100	1,200	
2	0166	CONC,PAVMT	0	100	0	0	917.00	UT	1.50	1.50	100	2001	2001	3	100	1,376	
3	0252	LEAN-TO W/	0	100	13	27	351.00	UT	3.00	3.00	100	2005	2005	3	100	1,053	
4	0294	SHED WOOD/	0	100	8	10	80.00	UT	9.00	9.00	100	2005	2005	3	100	720	
5	0281	POOL R/FIB	0	100	16	36	576.00	UT	65.00	65.00	100	2005	2005	3	47	17,597	
6	0070	CARPORT UF	0	100	0	0	1.00	UT	800.00	800.00	100	2021	2020		100	800	
7	0166	CONC,PAVMT	0	100	0	0	1.00	UT	500.00	500.00	100	2021	2020		100	500	
8	0210	GARAGE U	0	100	0	0	1.00	UT	4,000.00	4,000.00	100	2023	2022		100	4,000	

LAND DESCRIPTION

TOTAL OB/XF 27,246

LN	USE CODE	CLS	LAND USE DESCRIPTION	CAP	RD	LOC ZONE	FRONT	DEPTH	TOT LND UTS	UNIT TYPE	DT	DPTH FACT	% COND	TOT ADJ	UNIT PRICE	ADJ UNIT PRICE	LAND VALUE	OTHER ADJUSTMENTS AND NOTES	YEAR	DENSITY	DECL	FRZ	YR	CONSRV
1	0100	C	SFR	100		A-1	0.00	0.00	10.01	AC		1.00	1.00	0.90	9,000.00	8,100.00	81,081							

REVIEW DATE 01/31/2023 BY KS Total Acres: 10.01 Total Land Value: 81,081 Market: 0 Agricultural: 0 Common: 81,081 PRINTED 11/07/2025 BY SYS